AS/NZS 4600:2018

Australian/New Zealand Standard™

Cold-formed steel structures

Accessed by UNIVERSITY OF SOUTH AUSTRALIA on 03 May 2019 (Document currency not guaranteed when printed)

STANDARDS Australia

STANDARDS® NEW ZEALAND
PAEREWA AOTEAROA

This Joint Australian/New Zealand Standard was prepared by Joint Technical Committee BD-082, Cold-formed Steel Structures. It was approved on behalf of the Council of Standards Australia on 27 April 2018 and by the New Zealand Standards Approval Board on 2 May 2018.
This Standard was published on 15 May 2018.

The following are represented on Committee BD-082:

Australian Building Codes Board
Australian Chamber of Commerce and Industry
Australian Industry Group
Australian Steel Association
Australian Steel Institute
Bureau of Steel Manufacturers of Australia
Engineers Australia
National Association of Steel Framed Housing, Australia
National Association of Steel Framed Housing. New Zealand
Queensland University of Technology
University of Auckland
University of Sydney
University of Tasmania
Welding Technology Institute of Australia

Keeping Standards up-to-date

Standards are living documents which reflect progress in science, technology and systems. To maintain their currency, all Standards are periodically reviewed, and new editions are published. Between editions, amendments may be issued. Standards may also be withdrawn. It is important that readers assure themselves they are using a current Standard, which should include any amendments which may have been published since the Standard was purchased.

Detailed information about joint Australian/New Zealand Standards can be found by visiting the Standards Web Shop at www.saiglobal.com or Standards New Zealand web site at www.standards.govt.nz and looking up the relevant Standard in the on-line catalogue.

For more frequent listings or notification of revisions, amendments and withdrawals, Standards Australia and Standards New Zealand offer a number of update options. For information about these services, users should contact their respective national Standards organization.

We also welcome suggestions for improvement in our Standards, and especially encourage readers to notify us immediately of any apparent inaccuracies or ambiguities. Please address your comments to the Chief Executive of Standards Australia or the New Zealand Standards Executive at the address shown on the back cover.

This Standard was issued in draft form for comment as DR AS/NZS 4600:2017.

Accessed by UNIVERSITY OF SOUTH AUSTRALIA on 03 May 2019 (Document currency not guaranteed when printed)

Australian/New Zealand Standard™

Cold-formed steel structures

Originated in Australia as AS 1538—1974.
AS 1538—1988 jointly revised and redesignated AS/NZS 4600:1996.
Previous edition 2005.
Third edition 2018.

COPYRIGHT

© Standards Australia Limited

© The Crown in right of New Zealand, administered by the New Zealand Standards Executive

All rights are reserved. No part of this work may be reproduced or copied in any form or by any means, electronic or mechanical, including photocopying, without the written permission of the publisher, unless otherwise permitted under the Copyright Act 1968 (Australia) or the Copyright Act 1994 (New Zealand).

Jointly published by SAI Global Limited under licence from Standards Australia Limited, GPO Box 476, Sydney, NSW 2001 and by Standards New Zealand, PO Box 1473, Wellington 6140.

ISBN 978 1 76072 061 2

Accessed by UNIVERSITY OF SOUTH AUSTRALIA on 03 May 2019 (Document currency not guaranteed when printed)

PREFACE

This Standard was prepared by the Joint Standards Australia/Standards New Zealand Committee BD-082, Cold-formed Steel Structures. AS/NZS 4600:2005 will also remain current for 12 months after the date of publication of this Standard and after this time it will be superseded by AS/NZS 4600:2018. Regulatory authorities that reference this Standard in regulation may apply these requirements at a different time. Users of this Standard are advised to consult with these authorities to confirm their requirements.

The objective of this Standard is to provide designers of cold-formed steel structures with specifications for cold-formed steel structural members used for load-carrying purposes in buildings and other structures.

This edition incorporates the following major changes to the previous edition:

(a) Inclusion of G500 and G550 steels in Clause 1.5.1.3 for steels where the effects of welding do not need to be tested.

(b) Inclusion of reference to first order elastic, second order elastic and advanced analyses in Clause 1.6.2.

(c) Earthquake design for Australia in Clause 1.6.4.1 based on structural ductility index and structural performance factor to align with latest edition of AS 1170.4.

(d) Earthquake design for New Zealand in Clause 1.6.4.2 allows structural ductility factors up to 6.

(e) Non-circular holes added to uniformly compressed stiffened elements in Clause 2.2.2.

(f) New Clause 2.2.5 on intermittent connections in uniformly compressed elements.

(g) Elastic buckling moments in Clause 3.3 moved to Paragraph D2.1, Appendix D, for members subject to bending.

(h) Elastic buckling stresses in Clause 3.4 moved to Paragraph D1.1, Appendix D, for concentrically loaded compression members.

(i) New Clause 3.7 for sections subject to combined bending and torsional loading.

(j) New Clause 4.1.2 for compression members composed of two sections in contact.

(k) Old Clause 4.3.3.3 for bracing of cleatless roof systems under gravity load deleted.

(l) Revised Clause 4.3.3.3 (old Clause 4.3.3.4) for neither flange connected to sheeting has improved equations and a new diagram.

(m) New equation for net section tension in Clause 5.3.3 has improved shear lag factor.

(n) Bolted connections in bearing in Clause 5.3.4 now includes oversize and short-slotted holes.

(o) Screws in shear and tension now allow the limit state based on testing of the screws.

(p) Screwed connections in tension in Clause 5.4.3.2 now include round head, hex head, pancake screw washer head, hex washer head and domed head.

(q) New rules in Clause 5.4.3.2 for screwed connections attaching roof battens.

(r) New rules for screwed connections in combined bending and tension.

(s) Design of power-actuated fasteners (PAFs) now included in Clause 5.5.

(t) Revised equations for block shear rupture in Clause 5.7.3 based on active shear planes.

Accessed by UNIVERSITY OF SOUTH AUSTRALIA on 03 May 2019 (Document currency not guaranteed when printed)

(u) Range of prequalified members in Clause 7.1.1 (Table 7.1) for the direct strength method (DSM) extended to a wider range of sections with multiple intermediate stiffeners and return lips.

(v) Compression and flexural members with holes and flexural members with inelastic reserve capacity now included in the DSM Clauses 7.2.1 and 7.2.2.

(w) Shear and combined bending and shear added to the DSM in Clause 7.2.3.

(x) Combined compression/tension and bending added to the DSM in Clause 7.2.4.5 respectively.

(y) Design values based on prototype testing in Clause 8.4.1 can now use the average test value.

(z) Strength prediction model from testing based on verification model BV1 of National Construction Code (NCC).

(aa) New Section 9, Fire design, added for steel sections made from AS 1397, steel and with a fire resistant barrier.

(bb) New Appendix B, Paragraph B2, First order elastic analysis, Paragraph B3, Second order elastic analysis and Paragraph B4, Advanced analysis, added.

(cc) Appendix D extended to buckling stresses and actions for sections in compression, bending and shear including sections with holes.

(dd) Informative Appendix G added for members subject to non-uniform temperature distribution.

Notes to the text contain information and guidance. They are not an integral part of the Standard.

Sections of this Standard have been reproduced from AISI S100, *North American Specification for the Design of Cold-Formed Steel Structural Members*, with permission from the American Iron and Steel Institute.

Standards Australia thanks NASH (National Association of Steel-framed Housing) for permission to reproduce sections of NASH Standard—*Residential and Low-rise Steel Framing, Part 1: Design Criteria* in Clause 1.6 and Clause 8.4 of this Standard.

A statement expressed in mandatory terms in a note to a table is deemed to be a requirement of this Standard.

The terms ‘normative’ and ‘informative’ have been used in this Standard to define the application of the appendix to which they apply. A ‘normative’ appendix is an integral part of a Standard, whereas an ‘informative’ appendix is only for information and guidance.

Accessed by UNIVERSITY OF SOUTH AUSTRALIA on 03 May 2019 (Document currency not guaranteed when printed)

CONTENTS

Page

SECTION 1 SCOPE AND GENERAL
1.1 SCOPE 6
1.2 NORMATIVE REFERENCES 6
1.3 DEFINITIONS 6
1.4 NOTATION 13
1.5 MATERIALS 25
1.6 DESIGN REQUIREMENTS 29

SECTION 2 ELEMENTS
2.1 SECTION PROPERTIES 35
2.2 EFFECTIVE WIDTHS OF STIFFENED ELEMENTS 37
2.3 EFFECTIVE WIDTHS OF UNSTIFFENED ELEMENTS 45
2.4 EFFECTIVE WIDTHS OF UNIFORMLY COMPRESSED ELEMENTS WITH AN EDGE STIFFENER 48
2.5 EFFECTIVE WIDTHS OF UNIFORMLY COMPRESSED STIFFENED ELEMENTS WITH ONE INTERMEDIATE STIFFENER 50
2.6 EFFECTIVE WIDTHS OF UNIFORMLY COMPRESSED STIFFENED ELEMENTS WITH MULTIPLE INTERMEDIATE STIFFENER 52
2.7 EFFECTIVE WIDTHS OF UNIFORMLY COMPRESSED EDGE-STIFFENED ELEMENTS WITH INTERMEDIATE STIFFENERS 55
2.8 ARCHED COMPRESSION ELEMENTS 56

SECTION 3 MEMBERS
3.1 GENERAL 57
3.2 MEMBERS SUBJECT TO AXIAL TENSION 57
3.3 MEMBERS SUBJECT TO BENDING 59
3.4 CONCENTRICALLY LOADED COMPRESSION MEMBERS 76
3.5 COMBINED AXIAL COMPRESSION OR TENSION, AND BENDING 78
3.6 CYLINDRICAL TUBULAR MEMBERS 80
3.7 COMBINED BENDING AND TORSIONAL LOADING 82

SECTION 4 STRUCTURAL ASSEMBLIES
4.1 BUILT-UP SECTIONS 83
4.2 MIXED SYSTEMS 85
4.3 LATERAL RESTRAINTS 85
4.4 WALL STUDS AND WALL STUD ASSEMBLIES 88

SECTION 5 CONNECTIONS
5.1 GENERAL 89
5.2 WELDED CONNECTIONS 89
5.3 BOLTED CONNECTIONS 101
5.4 SCREWED CONNECTIONS 107
5.5 POWER-ACTUATED FASTENERS (PAFs) 112
5.6 BLIND RIVETED CONNECTIONS 117
5.7 RUPTURE 119
5.8 OTHER CONNECTIONS USING ANY TYPE OF FASTENERS 120

Accessed by UNIVERSITY OF SOUTH AUSTRALIA on 03 May 2019 (Document currency not guaranteed when printed)

SECTION 6 FATIGUE
6.1 GENERAL 121
6.2 CALCULATION OF MAXIMUM STRESSES AND STRESS RANGE 124
6.3 DETAIL CATEGORIES FOR CLASSIFIED DETAILS 125
6.4 FATIGUE ASSESSMENT 127

SECTION 7 DIRECT STRENGTH METHOD
7.1 GENERAL 129
7.2 MEMBERS 130

SECTION 8 TESTING
8.1 TESTING FOR DETERMINING MATERIAL PROPERTIES 141
8.2 TESTING FOR ASSESSMENT OR VERIFICATION 142
8.3 COEFFICIENT OF VARIATION OF STRUCTURAL CHARACTERISTICS 143
8.4 DESIGN VALUES 144

SECTION 9 FIRE DESIGN
9.1 REQUIREMENTS 146
9.2 DEFINITIONS 146
9.3 DETERMINATION OF THE PERIOD OF STRUCTURAL ADEQUACY 146
9.4 ELEVATED TEMPERATURE MECHANICAL PROPERTIES 147
9.5 DETERMINATION OF MEMBER CAPACITIES AT ELEVATED TEMPERATURES 150
9.6 DETERMINATION OF LIMITING TEMPERATURE 151
9.7 DETERMINATION OF TEMPERATURE-TIME RELATIONSHIPS FOR PROTECTED MEMBERS 151
9.8 DETERMINATION OF PSA FROM THE STANDARD FIRE TEST 151
9.9 CONNECTIONS 151

APPENDICES
A NORMATIVE REFERENCES 152
B METHODS OF ANALYSIS 154
C PROTECTION 159
D BUCKLING STRESSES AND MOMENTS AND SHEARS FOR SECTIONS IN COMPRESSION, BENDING AND SHEAR 161
E SECTION PROPERTIES 177
F STANDARD TESTS FOR SINGLE-POINT FASTENER CONNECTIONS 180
G MEMBERS SUBJECT TO NON-UNIFORM TEMPERATURE DISTRIBUTIONS 185

BIBLIOGRAPHY 191

Accessed by UNIVERSITY OF SOUTH AUSTRALIA on 03 May 2019 (Document currency not guaranteed when printed)

STANDARDS AUSTRALIA/STANDARDS NEW ZEALAND

Australian/New Zealand Standard
Cold-formed steel structures

SECTION 1 SCOPE AND GENERAL

1.1 SCOPE

This Standard sets out minimum requirements for the design of structural members cold-formed to shape from carbon or low-alloy steel sheet, strip, plate or bar not more than 25 mm in thickness and used for load-carrying purposes in buildings. It is also applicable for structures other than buildings, provided appropriate allowances are made for dynamic effects.

This Standard does not apply to the design of structures subject to brittle fracture.

1.2 NORMATIVE REFERENCES

Normative documents referenced in this Standard are listed in Appendix A.

NOTE: Documents referenced for informative purposes are listed in the Bibliography.

1.3 DEFINITIONS

For the purpose of this Standard, the definitions below apply. Definitions peculiar to a particular clause or section are also given in that clause or section.

1.3.1 Action

Set of concentrated or distributed forces acting on a structure (direct action), or deformation imposed on a structure or constrained within it (indirect action).

1.3.2 Action effect (internal effects of actions, load effects)

Internal forces and bending moments due to actions (stress resultants).

1.3.3 Arched compression element

A circular or parabolic arch-shaped compression element having an inside radius-to-thickness ratio greater than 8, stiffened at both ends by edge stiffeners. See Figure 1.3(C).

1.3.4 Assemblage of elements

A system of interconnected cold-formed steel elements that act together to resist earthquake action in such a way that the strength and deformation capacity of the system is not adversely affected by the buckling or crippling of any one element of the assemblage.

1.3.5 Bend

Portion adjacent to flat elements and having a maximum inside radius-to-thickness ratio (r_i/t) of 8. See Figure 1.3(A).

1.3.6 Braced member

Member for which the transverse displacement of one end of the member relative to the other is effectively prevented.

Accessed by UNIVERSITY OF SOUTH AUSTRALIA on 03 May 2019 (Document currency not guaranteed when printed)

COPYRIGHT

1.3.7 Can

Implies a capability or possibility and refers to the ability of the user of the Standard, or to a possibility that is available or that might occur.

1.3.8 Capacity design principles

Appropriate material Standard design and detailing provisions, which enable zones where post-elastic response is acceptable to be identified and detailed in a manner that ensures these zones are capable of accepting the inelastic demands placed upon them.

NOTE: All other zones are to be designed to ensure that all other undesirable inelastic response mechanisms are suppressed and detailed in a manner that the ultimate limit state horizontal deformations that they are expected to be subjected to, can be sustained without significant (e.g. greater than 20%) loss of load-carrying capacity after four complete cycles of loading.

1.3.9 Capacity reduction factor

A factor used to multiply the nominal capacity to obtain the design capacity.

1.3.10 Clinching

Structural fastening of two or more flat elements by single-point embossing or piercing without using additional material.

1.3.11 Cold-formed steel structural members

Shapes that are manufactured by press-braking blanks sheared from sheets, cut lengths of coils or plates, or by roll forming cold- or hot-rolled coils or sheets; both forming operations being performed at ambient room temperature, that is, without manifest addition of heat as required for hot-forming.

1.3.12 Direct strength method

An alternative design method that provides predictions of member resistance without the use of effective widths.

1.3.13 Design action effect

The action effect computed from the design values of the actions or design loads.

1.3.14 Design capacity

The product of the capacity reduction factor and the nominal capacity.

1.3.15 Distortional buckling

A mode of buckling involving change in cross-sectional shape, excluding local buckling.

1.3.16 Doubly-symmetric section

A section symmetric about two orthogonal axes through its centroid. See Figure 1.3(E).

1.3.17 Effective design width (or effective width)

Where the flat width of an element is reduced for design purposes.

1.3.18 Elements

Simple shapes into which a cold-formed structural member is considered divided and may consist of the following shapes:

(a) *Flat elements* Appearing in cross-section as rectangles. See Figure 1.3(B).

(b) *Bends* Appearing in cross-section as sectors of circular rings, having the inside radius-to-thickness ratio less than or equal to eight ($r_i/t \leq 8$). See Figure 1.3(B).

(c) *Arched elements* Circular or parabolic elements having the inside radius-to-thickness ratio greater than eight ($r_i/t > 8$). See Figure 1.3(B).

Accessed by UNIVERSITY OF SOUTH AUSTRALIA on 03 May 2019 (Document currency not guaranteed when printed)

COPYRIGHT

1.3.19 Feed width (w_f)

Width of coiled or flat steel used in the production of a cold-formed product.

1.3.20 Flexural-torsional buckling

A mode of buckling in which compression members can bend and twist simultaneously without change of cross-sectional shape.

1.3.21 Length (of a compression member)

The actual length (l) of an axially loaded compression member, taken as the length centre-to-centre of intersections with supporting members, or the cantilevered length in the case of a freestanding member.

1.3.22 Limit states

States beyond which the structure no longer satisfies the design criteria.

NOTE: Limit states separate desired states (conformance) from undesired states (non-conformance).

1.3.23 Limit states, serviceability

States that correspond to conditions beyond which specified service criteria for a structure or structural element are no longer met.

1.3.24 Limit states, stability

States that correspond to the loss of static equilibrium of a structure considered as a rigid body.

1.3.25 Limit states, ultimate

States associated with collapse, or with other similar forms of structural failure.

NOTE: This generally corresponds to the maximum load-carrying resistance of a structure or structural element, but, in some cases, to the maximum applicable strain or deformation.

1.3.26 Load

The value of a force appropriate for an action.

1.3.27 Local buckling

A mode of buckling involving plate flexure alone without transverse deformation of the line or lines of intersection of adjoining plates.

1.3.28 May

Indicates the existence of an option.

1.3.29 Multiple-stiffened element

An element that is stiffened between webs, or between a web and a stiffened edge, by means of intermediate stiffeners that are parallel to the direction of stress. See Figure 1.3(C).

1.3.30 Nominal action effect or nominal load

An unfactored action effect or load determined in accordance with the relevant loading Standard.

1.3.31 Nominal capacity

The capacity of a member or connection, calculated using the parameters specified in this Standard.

1.3.32 Nominal dimension

A specified manufactured dimension.

Accessed by UNIVERSITY OF SOUTH AUSTRALIA on 03 May 2019 (Document currency not guaranteed when printed)

COPYRIGHT

1.3.33 Patterned hole

A hole of a fixed size that repeats at a regular interval.

1.3.34 Point-symmetric section

A section symmetrical about a point (centroid) such as a Z-section having equal flanges. See Figure 1.3(E)(b).

1.3.35 Power-actuated fastener (PAF)

Hardened steel fastener driven through a steel member into embedment material using either a power cartridge or compressed gas as the energy driving source.

1.3.36 Power-actuated fastener point

Portion of pointed end of PAF shank with varying diameter.

1.3.37 Primary structure

The structural system provided to carry the earthquake forces generated in the structure to the ground.

1.3.38 Proof testing

Application of test loads to a structure, sub-structure, member or connection, to ascertain the structural characteristics of only that one item under test.

1.3.39 Prototype testing

Application of test loads to one or more structures, sub-structures, members or connections, to ascertain the structural characteristics of that class of structures, sub-structures, members or connections which are nominally identical to the units tested.

1.3.40 Pull-over (pull-through)

Failure of a single-point connection by the sheet being pulled over the head of the fastener or the head of the fastener being pulled through the sheet.

1.3.41 Pull-out

Failure of a single-point connection by the embedded part of the fastener being pulled out of the member.

1.3.42 Rational elastic buckling analysis

An elastic buckling analysis in which the methodology is based on structural stability theory for the section or member as appropriate.

1.3.43 Segment (in a member subjected to bending)

The length between adjacent cross-sections, which are fully or partially restrained, or the length between an unrestrained end and the adjacent cross-section, which is fully or partially restrained.

1.3.44 Shall

Indicates that a statement is mandatory.

1.3.45 Should

Indicates a recommendation (non-mandatory).

1.3.46 Single-point fastener

A mechanical connection at a single discrete point such as a screw or rivet.

1.3.47 Singly-symmetric (monosymmetric) section

A section symmetric about only one axis through its centroid. See Figure 1.3(E)(c).

Accessed by UNIVERSITY OF SOUTH AUSTRALIA on 03 May 2019 (Document currency not guaranteed when printed)

COPYRIGHT

1.3.48 Special study

A procedure for the analysis or design, or both, of the structure, agreed between the authority having statutory powers to control the design and erection of a structure, and the design engineer.

1.3.49 Stiffened or partially stiffened compression element

A flat compression element (that is a plane compression flange of a flexural member or a plane web or flange of a compression member) of which both edges parallel to the direction of stress are stiffened by a web, flange, edge stiffener, intermediate stiffener, or the like. See Figure 1.3(a).

1.3.50 Stiffeners

1.3.50.1 *Edge stiffener*

Formed element at the edge of a flat compression element. See Figure 1.3(D)(a).

1.3.50.2 *Intermediate stiffeners*

Formed elements, employed in multiple-stiffened segments, and located between edges of stiffened elements. See Figure 1.3(D)(b).

1.3.51 Structural ductility factor

A numerical assessment of the ability of a structure to sustain cyclic inelastic displacements.

1.3.52 Structural performance factor

A numerical assessment of the ability of a building to survive cyclic displacements.

1.3.53 Structural response factor

The level of force reduction available for a given system compared with an elastic structural system.

1.3.54 Sub-element

The portion between adjacent stiffeners, or between web and intermediate stiffener, or between edge and stiffener.

1.3.55 Tensile strength

The minimum ultimate strength in tension specified for the grade of steel in the appropriate Standard.

1.3.56 Thickness

The base steel thickness (t), exclusive of coatings.

1.3.57 Unformed steel

Steel as received from the steel producer or warehouse before being cold-worked as a result of fabricating operations.

1.3.58 Unformed steel properties

Mechanical properties of unformed steel, such as yield stress, tensile strength and ductility.

1.3.59 Unstiffened compression element

A flat compression element which is stiffened at only one edge parallel to the direction of stress. See Figure 1.3(C)(b).

Accessed by UNIVERSITY OF SOUTH AUSTRALIA on 03 May 2019 (Document currency not guaranteed when printed)

COPYRIGHT

1.3.60 Yield stress

The minimum yield stress in tension specified for the grade of steel in the appropriate Standard.

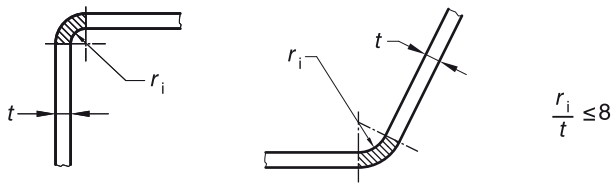

FIGURE 1.3(A) BENDS

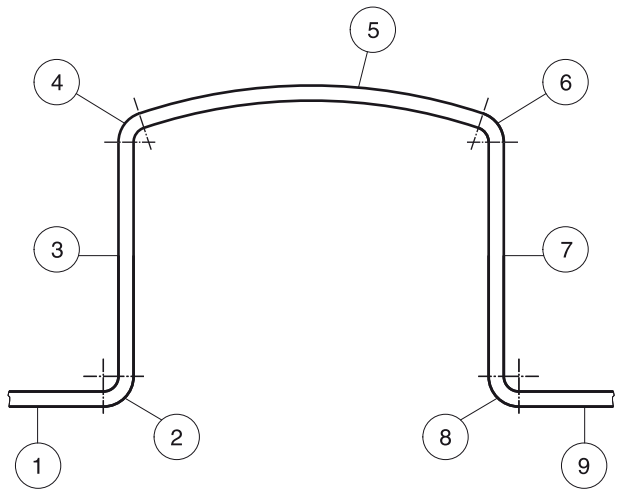

NOTE: The member illustrated consists of the following nine elements:

(a) Elements 1, 3, 7, 9 are flat elements (flats).

(b) Elements 2, 4, 6, 8 are bends ($r_i/t \leq 8$).

(c) Element 5 is an arched element ($r_i/t > 8$).

FIGURE 1.3(B) ELEMENTS

Accessed by UNIVERSITY OF SOUTH AUSTRALIA on 03 May 2019 (Document currency not guaranteed when printed)

COPYRIGHT

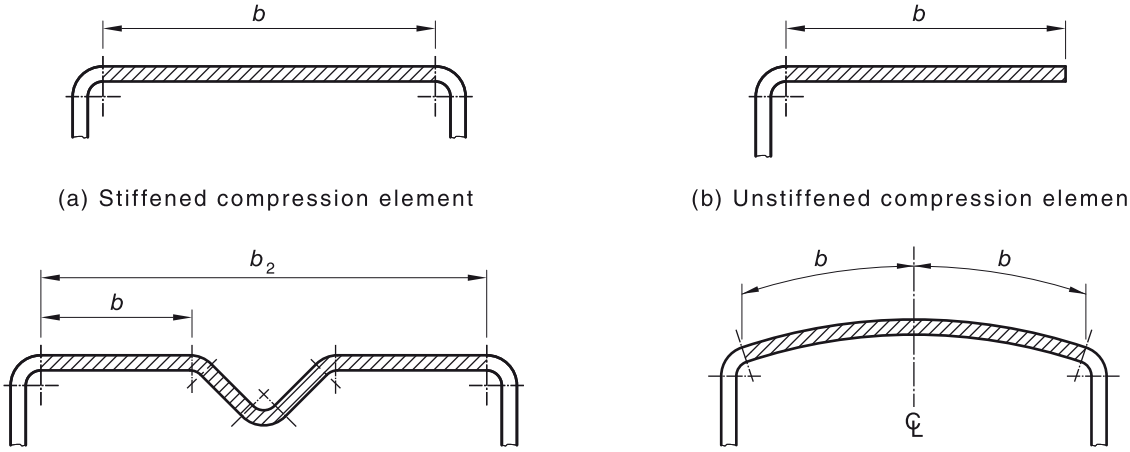

(a) Stiffened compression element

(b) Unstiffened compression element

One or more intermediate stiffeners

(c) Multiple-stiffened element

(d) Arched compression element

FIGURE 1.3(C) STIFFENING MODES

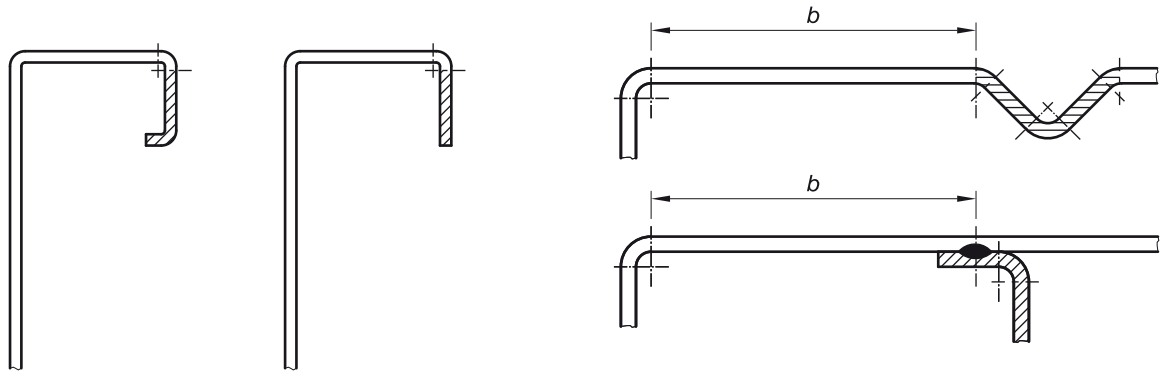

(a) Edge stiffener

(b) Intermediate stiffener

FIGURE 1.3(D) STIFFENERS

Accessed by UNIVERSITY OF SOUTH AUSTRALIA on 03 May 2019 (Document currency not guaranteed when printed)

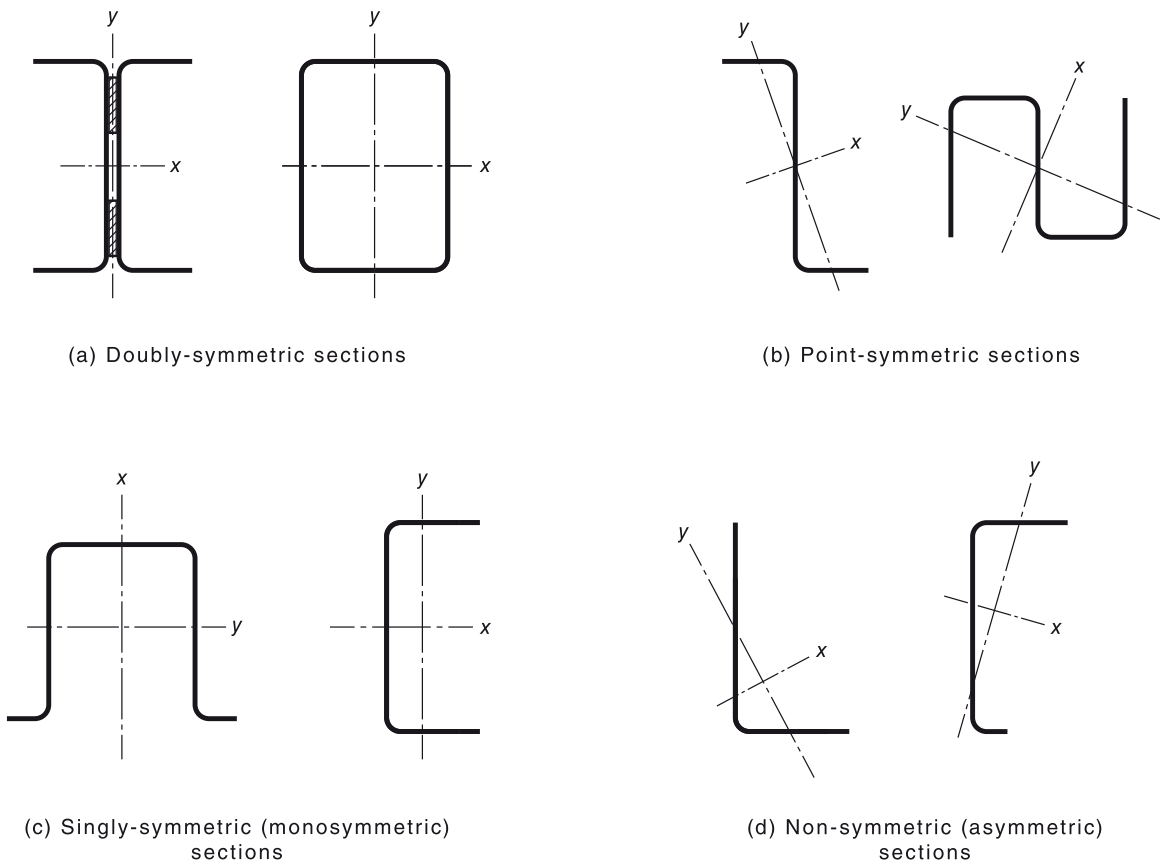

(a) Doubly-symmetric sections

(b) Point-symmetric sections

(c) Singly-symmetric (monosymmetric) sections

(d) Non-symmetric (asymmetric) sections

FIGURE 1.3(E) EXAMPLES OF SECTION SYMMETRY

1.4 NOTATION

The symbols used in this Standard are listed in Table 1.4.

Where non-dimensional ratios are involved, both the numerator and denominator are expressed in identical units.

The dimensional units for length and stress in all expressions or equations are to be taken as millimetres (mm) and megapascals (MPa) respectively, unless specifically noted otherwise.

An asterisk placed after a symbol denotes a design action effect due to the design load for the ultimate limit state.

Accessed by UNIVERSITY OF SOUTH AUSTRALIA on 03 May 2019 (Document currency not guaranteed when printed)

COPYRIGHT

TABLE 1.4
NOTATION

Symbol	Description	Reference
A_{av}	active shear area subject to shear in block shear rupture	5.7.3
A_c	minor diameter area of a bolt	5.3.5.1
A_e	effective area of the bearing stiffener subjected to uniform compressive stress; *or* effective area at the yield stress (f_y) to calculate N_s; *or* effective area at the critical stress (f_n) to calculate N_c	3.3.8.2, 3.4.1, 3.6.3
A_g	gross area of the element including stiffeners; *or* gross area of the cross-section	2.6.1, 3.2.2
A_n	net area of the cross-section; *or* net area of the connected part	3.2.2, 5.3.3, 5.4.2.2, 5.5.2.2
A_{nt}	net area subject to tension in block shear rupture	5.6.3
A_o	reduced area due to local buckling; *or* plain shank area of a bolt	3.6.3, 5.3.5.1
A_s	reduced area of a stiffener; *or* gross area of the stiffener; *or* cross-sectional area of a transverse stiffener; *or* tensile stress area of a bolt	2.5.2, 2.6.2.1, 3.3.8.1, 5.3.5.2
A_{se}	effective area of a stiffener	2.4.2, 2.5.2
A_{st}	gross area of a shear stiffener	3.3.8.3
A_{s1}, A_{s2}	area of a member in compression consisting of the transverse stiffeners and a portion of the web	3.3.8.1
A_{wn}	net area of the web	5.7.1
a	bracing interval; *or* shear panel length for unstiffened web elements; *or* distance between transverse stiffeners for stiffened web elements; *or* distance between centre-lines of braces	3.3.4.1, 3.3.8.3, 4.3.3.3, Paragraph D2.1.1, Appendix D
B_c	constant	1.5.1.2
b	flat width of element excluding radii; *or* length of the web hole; *or* half the length of the arched compression element	2.2.1.2, 2.2.4.1, 2.5.2, 3.3.5, 4.1.2
b_e	effective width of uniformly compressed stiffened and unstiffened elements used for determining the capacity	2.2.1.2, 2.2.2.2, 2.2.3.2, 2.3.1.2, 2.3.1.3, 2.3.2.2, 2.3.2.3, 2.4.2, 2.4.3, 2.5.3, 2.6.1, 2.6.2.2, 2.7
b_{ed}	effective width of uniformly compressed stiffened and unstiffened elements used for determining the deflection	2.2.1.3, 2.2.2.3
b_{e1}, b_{e2}	effective width of stiffened element with stress gradient	2.2.3.2, 2.2.3.3
b_f	flange width of a section	3.4.3
b_o	total flat width of an element with an intermediate stiffener	2.6.1, 2.6.2.1
b_p	greatest sub-element flat width	2.6.3.1

(*continued*)

Accessed by UNIVERSITY OF SOUTH AUSTRALIA on 03 May 2019 (Document currency not guaranteed when printed)

COPYRIGHT

TABLE 1.4 (*continued*)

Symbol	Description	Reference
b_1	width of the flange projecting beyond the web for I-beams and similar sections; *or* half the distance between webs for box- or U-type sections; *or* sum of the flange projection beyond the web and the depth of the lip for I-beams and similar sections; *or* width of stiffened element	2.1.3.2, 2.1.3.3, 2.3.2.2
b_2	width of unstiffened element; *or* flat width of element with intermediate stiffener excluding radii; *or* total flat width of the edge-stiffened element	2.3.2.2, 2.5.2, 2.7
C	for compression members, ratio of the total bend cross-sectional area to the total cross-sectional area of the full section; *and* for flexural members, ratio of the total bend cross-sectional area of the controlling flange to the full cross-sectional area of the controlling flange; *or* coefficient; *or* bearing factor	1.5.1.2, 3.3.6.2, 5.3.4.2, 5.4.2.3
C_b	coefficient depending on moment distribution in the laterally unbraced segment	Paragraph D2.1.1, Appendix D
C_i	horizontal distance from the edge of the element to the centre-line of the stiffener	2.6.3.1
C_{TF}	coefficient for unequal end moment	3.5.1, Paragraph D2.1.1, Appendix D
C_l	coefficient of bearing length	3.3.6.2
C_{mx}, C_{my}	coefficient for unequal end moment	3.5.1
C_r	coefficient of inside bent radius	3.3.6.2
C_s	coefficient for moment causing compression or tension on the shear centre side of the centroid	3.3.3.2.1
C_w	coefficient of web slenderness	3.3.6.2
C_y	compression strain factor	3.3.2.3
c	flat width	2.2.2.2.2
c_f	amount of curling	2.1.3.2
d	depth of a section (or actual stiffener dimension)	2.1.3.2, Figure 2.4.2(a), 3.3.6.3, 3.4.3
d_a	average diameter of an arc spot weld at mid-thickness of t_c; *or* average width of an arc seam weld	5.2.4.2, 5.2.5.2
d_e	effective diameter of a fused area of an arc spot weld; *or* effective width of an arc seam weld at fused surfaces	5.2.4.1, 5.2.4.2, 5.2.5.2
d_f	nominal diameter of a bolt, screw, blind rivet	Table 5.3.1, 5.3.2, 5.3.4.2, 5.4.1, 5.4.2.1, 5.4.2.2, 5.4.2.3, 5.5.1, 5.5.2.1, 5.5.2.2, 5.5.2.3
d_h	diameter of a hole	2.2.2.2, Table 5.3.1, 5.3.2, 5.6.1
d_l	overall stiffener dimension (or overall depth of lip)	Figure 2.4.2(a)
d_o	outside diameter of a tubular member	3.6.1, 3.6.2
d_s	reduced effective width of a stiffener	Figure 2.4.2(b)

(*continued*)

Accessed by UNIVERSITY OF SOUTH AUSTRALIA on 03 May 2019 (Document currency not guaranteed when printed)

COPYRIGHT

TABLE 1.4 (*continued*)

Symbol	Description	Reference
d_{se}	effective width of a stiffener	Figure 2.4.2(b)
d_{sh}	nominal shank diameter	Figure F1, Appendix F
d_w	depth of the compressed portion of the web; *or* visible diameter of the outer surface of an arc spot weld; *or* width of an arc seam weld; *or* screw head or washer diameter	3.3.2.3, 5.2.4.2, 5.2.5.2, 5.4.3.2
d_{wc}	coped depth of a web	5.7.1
d_{wh}	depth of the web hole	2.2.4.1, 3.3.4.2
d_1	depth of the flat portion of a web measured along the plane of the web; *or* width of elements adjoining the stiffened element	2.1.3.4, 2.2.4.1, 2.6.1, 3.3.4.1, 3.3.4.2, 3.3.6.2
E	Young's modulus of elasticity (200×10^3 MPa)	2.2.1.2, 3.3.2.3, 5.2.4.2
e	edge distance measured in the line of the force from centre-line of an arc spot weld, arc seam weld or from centre of a bolt hole to the nearest edge of an adjacent weld or bolt hole, or to the end of the connected part toward which the force is directed; *or* distance measured in the line of force from the centre of a standard hole to the nearest end of the connected part	5.2.4.3, 5.2.5.3, 5.3.2, 5.4.2.4, 5.5.2.4
e_y	yield strain	3.3.2.3
$f_{bending}$	bending stress at location in cross-section where combined bending and torsion stress effect is maximum	3.7
$f_{bending\ max}$	bending stress at extreme fibre taken on the same side of the neutral axis as $f_{bending}$	3.7
f_c	stress at service load in the cover plate or sheet; *or* fatigue strength corrected for thickness of material	4.1.2, 6.1.3
f_{cr}	plate elastic buckling stress	2.2.1.2, 3.4.2
f_f	uncorrected fatigue strength	6.1.3
f_n	critical stress	3.3.8.1, 3.4.1, 3.6.3
f_{oc}	elastic flexural, torsional and flexural-torsional buckling stress	3.4.1, 3.6.3, Paragraph D1.1.1.1, Appendix D
f_{od}	elastic distortional buckling stress of the cross-section	3.3.3.3, 7.2.1.4, 7.2.2.4.2, Paragraphs D1.2, D2.2, Appendix D
f_{ol}	elastic local buckling stress	7.2.1.3.1, 7.2.2.3.2
f_{ox}	elastic buckling stress in an axially loaded compression member for flexural buckling about the x-axis	Paragraph D1.1.1.2, Appendix D
f_{oy}	elastic buckling stress in an axially loaded compression member for flexural buckling about the y-axis	Paragraph D1.1.1.2, Appendix D
f_{oz}	elastic buckling stress in an axially loaded compression member for torsional buckling	Paragraph D1.1.1.2, Appendix D
f_{rn}	detail category reference fatigue strength at n_r-normal stress	6.1.3
f_{rnc}	corrected detail category reference fatigue strength for normal stress	6.1.3
f_{rs}	detail category reference fatigue strength at n_r-shear stress	6.1.3
f_{rsc}	corrected detail category reference fatigue strength for shear stress	6.1.3
$f_{torsion}$	torsional stress at location in cross-section where combined bending and torsion stress effect is maximum	3.7

(*continued*)

Accessed by UNIVERSITY OF SOUTH AUSTRALIA on 03 May 2019 (Document currency not guaranteed when printed)

COPYRIGHT

TABLE 1.4 (*continued*)

Symbol	Description	Reference
f_u	tensile strength used in design; *or* tensile strength of sheet	1.5.1.1, 1.5.1.4, 1.5.1.6, 1.5.2, 3.2.2, 5.3.4.2
f_{uf}	minimum tensile strength of a bolt	5.3.5.1
f_{uv}	tensile strength of unformed steel	1.5.1.2
f_{uw}	nominal tensile strength of a weld metal	5.2.2.2, 5.2.3.4
f_{u1}	tensile strength used in the design of the connected plate of the thickness t_1; *or* tensile strength of the sheet in contact with the screw head or with the rivet head	5.2.3.3, 5.4.2.3, 5.5.2.3
f_{u2}	tensile strength used in the design of the connected plate of the thickness t_2; *or* tensile strength of the sheet not in contact with the screw head or with the rivet head	5.2.3.3, 5.4.2.3, 5.5.2.3
f_y	yield stress used in design; *or* yield stress of web steel; *or* yield stress of stiffener; *or* yield stress used in design for the lower strength base steel; *or* tensile or compressive yield stress	1.5.1.1, 1.5.1.4, 1.5.1.6, 1.5.2, 3.2.2, 3.3.2.3, 3.3.8.2, 5.2.2.1, 6.1.3, 8.1.3
f_{wy}	lower yield stress value of the beam web (f_y) or of the stiffener section (f_{ys})	3.3.8.1
f_{ya}	average design yield stress of a full section	1.5.1.2
f_{yc}	tensile yield stress of bends	1.5.1.2
f_{yf}	yield stress of flat portions; *or* yield stress of unformed steel if tests are not made; *or* yield stress of flat coupons of formed members	1.5.1.2, 8.1.4.1
f_{ys}	yield stress of stiffener steel	3.3.8.1
f_{yv}	tensile yield stress of unformed steel	1.5.1.2
f_3	detail category fatigue strength at constant amplitude fatigue limit (5 × 106 cycles)	6.1.3
f_{3c}	corrected detail category fatigue strength at constant amplitude fatigue limit	6.1.3
f_5	detail category fatigue strength at cut off limit (108 cycles)	6.1.3
f_{5c}	corrected detail category fatigue strength at cut off limit	6.1.3
f^*	design stress in the compression element calculated on the basis of the effective design width; *or* design stress range	2.2.1.2, 2.4.2, 6.1.3
f^*_{av}	average design stress in the full, unreduced flange width	2.1.3.2
f^*_d	design compressive stress in the element being considered, based on the effective section at the load for which deflections are determined	2.2.1.3, 2.2.2.3, 2.6.2.2, 2.6.3.2
f^*_{d1}	calculated stress f^*_1	2.2.3.3
f^*_{d2}	calculated stress f^*_2	2.2.3.3
f^*_i	design stress range for loading event i	6.1.3
f^*_1, f^*_2	web stresses calculated on the basis of the effective section specified in Clause 2.2.3.2 or the full section specified in Appendix F	2.2.3.2, 2.3.2.2
G	shear modulus of elasticity (80×10^3 MPa)	Paragraph D1.1.1.2, Appendix D

(*continued*)

Accessed by UNIVERSITY OF SOUTH AUSTRALIA on 03 May 2019 (Document currency not guaranteed when printed)

COPYRIGHT

TABLE 1.4 (*continued*)

Symbol	Description	Reference
I_a	adequate second moment of area of a stiffener, so that each component element behaves as a stiffened element	2.4.2, 2.5.2
I_b	second moment of area of the full, unreduced cross-section about the bending axis	3.5.1
I_{eff}	effective second moment of area for deflection	7.1.3
I_g	gross second moment of area	7.1.3
$I_{min.}$	minimum second moment of area	2.8
I_s	second moment of area of a full stiffener about its own centroidal axis parallel to the element to be stiffened	2.4.2, 2.5.2
I_{sp}	second moment of area of a stiffener about the centre-line of the flat portion of the element	2.6.2.1
I_w	warping constant for a cross-section	Paragraphs D1.1.1.2, Appendix D, and E1, Appendix E
I_x, I_y	second moment of area of the cross-section about the principal *x*- and *y*-axes	Paragraph D2.1.1, Appendix D
I_x	second moment of area of the cross-section about its centroidal axis perpendicular to the web	4.3.3.3
I_{xy}	product of second moment of area of the full section about its centroidal axes parallel and perpendicular to the web	4.3.3.3
I_{yc}	second moment of area of the compression portion of a section about the centroidal axis of the full section parallel to the web, using the full unreduced section	Paragraph D2.1.1, Appendix D
i	index for stiffener '*i*'	2.6.3.1
J	torsion constant for a cross-section	Paragraphs D2.1.1, Appendix D, and E1, Appendix E
k	plate buckling coefficient; *or* non-dimensional yield stress	2.2.1.2, 2.3.2.2, Table 2.4.2, 2.5.2, 2.6.1
k_d	plate buckling coefficient for distortional buckling	2.6.1
k_f	factor to account for variation due to fabrication	8.4.2.1
k_{loc}	plate buckling coefficient for local sub-element buckling	2.6.1
k_m	factor to account for variation due to material	8.4.2.1
k_s	shear stiffener coefficient	3.3.8.3
k_{st}	stiffener type coefficient	3.3.8.2
k_t	correction factor for distribution of forces; *or* factor to account for accuracy of the prediction	3.2.2, Table 3.2
$k_{t\text{-}ave}$	sampling factor	8.4.1
$k_{t\text{-}min}$	sampling factor	8.4.1
k_v	shear buckling coefficient	3.3.4.1, 3.3.8.3
L_{crd}	distortional buckling half-wavelength with gross cross section	Paragraph D1.2.2, Appendix D
L_{gv}	distance from free edge to centre-line of bolt furthest from the edge	5.7.3
L_h	overall length of hole	2.2.2.2.2

(*continued*)

Accessed by UNIVERSITY OF SOUTH AUSTRALIA on 03 May 2019 (Document currency not guaranteed when printed)

COPYRIGHT

TABLE 1.4 (*continued*)

Symbol	Description	Reference
l	actual length of a compression member; *or* full span for simple beams; *or* distance between inflection points for continuous beams; *or* twice the length of cantilever beams; *or* unbraced length of a member; *or* laterally unbraced length of a member; *or* length of a member	1.3.21, 2.1.3.3, 3.3.3.2.2, 3.5.1, 4.1.1, 6.1.3, Paragraph D2.1.1, Appendix D
l_a	lap length	Figure F1, Appendix F
l_b	actual length of bearing	3.3.6.2, 3.3.6.3
l_{br}	unsupported length of bracing or other restraint that restricts distortional buckling of the element	2.6.2.1
l_c	unclamped length of the specimen	Figure F1, Appendix F
l_e	effective length of the member	3.4.1, Paragraph D1.1.1.1, Appendix D
l_{ex}, l_{ey}, l_{ez}	effective buckling length for bending about the x- and y-axes, and for twisting, respectively	Paragraph D1.1.1.2
l_{eb}	effective length in the plane of bending	3.5.1
l_g	gauge length for measuring the joint displacement	Figure F1, Appendix F
l_{st}	length of transverse stiffener	3.3.8.1
l_{sb}	length of bearing stiffener	3.3.8.1
l_u	limit of unbraced length by which lateral-torsional buckling is not considered	3.3.3.2.2
l_w	length of the full size of the weld; *or* length of fillet weld	5.2.2.1, 5.2.3.3, 5.2.3.4, 5.2.5.2
l_{w1}, l_{w2}	leg lengths of fillet weld	5.2.3.4
M	moment due to nominal loads on member to be considered	7.1.4
M_b	nominal member moment capacity	2.2.1.2, 3.3.1, 3.3.3.1, 3.3.3.2.1, 3.3.3.2.2, 3.3.3.3, 3.3.3.4, 3.3.5, 3.6.2, 7.2.2.1 Paragraph B2, Appendix B
M_{bx}, M_{by}	nominal member moment capacities about the x- and y-axes, respectively	3.5.1, 3.5.2
M_c	critical moment	3.3.3.2.1, 3.3.3.3
M_{bd}	nominal member capacity for distortional buckling	7.2.2.4.2, 7.2.2.4.3
M_{be}	nominal member capacity for lateral-torsional buckling	7.2.2.2.2, 7.2.2.3.2
M_{bl}	nominal member capacity for local buckling	7.2.2.3.2, 7.2.2.3.3
$M_{max.}$	absolute value of the maximum moment in the unbraced segment	Paragraph D2.1.1, Appendix D
M_n	nominal flexural capacity	7.1.4
M_o	elastic buckling moment; *or* elastic lateral-torsional buckling moment	7.2.2.2.2, Paragraph D2.1.1, Appendix D
M_{od}	elastic buckling moment in the distortional mode	3.3.3.3, 7.2.2.4.2, Paragraph D2.2.4.2, Appendix D

(*continued*)

Accessed by UNIVERSITY OF SOUTH AUSTRALIA on 03 May 2019 (Document currency not guaranteed when printed)

COPYRIGHT

TABLE 1.4 (*continued*)

Symbol	Description	Reference
M_{ol}	elastic local buckling moment	7.2.2.3.2
M_s	nominal section moment capacity	2.2.1.2, 3.3.1, 3.3.2.1, 3.3.2.2, 3.3.2.3, 3.3.3.5, 3.3.5, 3.3.7
M_{sxf}, M_{syf}	nominal section yield moment capacity of the full section about the *x*- and *y*-axes, respectively	3.5.2
M_y	moment causing initial yield at the extreme compression fibre of a full section	2.2.1.2, 3.3.3.2.1, 3.3.3.3
$M_{y\text{-net}}$	member yield capacity on net cross-section	7.2.2.4.3
M_1	smaller bending moment at the ends of the unbraced length	Paragraph D2.1.1, Appendix D
M_2	larger bending moment at the ends of the unbraced length	Paragraph D2.1.1, Appendix D
M_3	absolute value of the moment at quarter point of the unbraced segment	Paragraph D2.1.1, Appendix D
M_4	absolute value of the moment at mid-point of the unbraced segment	Paragraph D2.1.1, Appendix D
M_5	absolute value of the moment at three-quarter point of the unbraced segment	Paragraph D2.1.1, Appendix D
M^*	design bending moment	3.3.1, 3.3.5, 3.3.7, 3.6.2
M_x^*, M_y^*	design bending moment about the *x*- and *y*-axes, respectively	3.5.1, 3.5.2
m	constant; *or* non-dimensional thickness; *or* distance from the shear centre of one channel to the mid-plane of its web; *or* distance from the concentrated load to the brace	1.5.1.2, 4.1.1, 4.3.3.3, Paragraph E1, Appendix E
N_c	nominal member capacity of a member in compression	2.2.1.3, 3.3.8.1, 3.4.1, 3.4.3, 3.5.1, 7.2.1.2.1
N_{cd}	nominal member capacity for distortional buckling	7.2.1.1, 7.2.1.4.1
N_{ce}	nominal member capacity for flexural, torsional or flexural-torsional buckling	7.2.1.1, 7.2.1.2.1
N_{cl}	nominal member capacity for local buckling	7.2.1.1, 7.2.1.3.1
N_e	elastic buckling load	3.5.1
N_f	nominal tensile capacity of the section of the connected part	5.3.3
N_{ft}	nominal tensile capacity of a bolt	5.3.5.2
N_{oc}	least of the elastic column buckling load in flexural, torsional and flexural-torsional buckling	7.2.1.2.1
N_{od}	elastic distortional compression member buckling load	7.2.1.4.1
N_{ol}	elastic local buckling load	7.2.1.3.1
N_{ou}	nominal pull-out capacity of a screw	5.4.3.2
N_{ov}	nominal pull-over (pull-through) capacity of a screw	5.4.3.2
N_s	nominal section capacity of a member in compression	2.2.1.2, 3.3.8.1, 3.4.1, 3.5.1
N_t	nominal section capacity of a member in tension; *or* nominal capacity of the connection in tension; *or* capacity of the net section of the connected part	3.2.1, 3.5.2, 5.4.2.2, 5.4.3.2, 5.6.2.2

(*continued*)

Accessed by UNIVERSITY OF SOUTH AUSTRALIA on 03 May 2019 (Document currency not guaranteed when printed)

COPYRIGHT

TABLE 1.4 (*continued*)

Symbol	Description	Reference
N_w	nominal tensile or compressive capacity of a butt weld or an arc spot weld	5.2.2.1, 5.2.4.4
N_y	nominal yield capacity of a member in compression	7.2.1.2
N^*	design axial force, tensile or compressive; *or* design concentrated load or reaction	3.2.1, 3.3.8.1, 3.4.1, 3.5.1, 3.5.2, 3.6.3, 4.1.1
N_f^*	design tensile force on the net section of the connected part	5.3.3
N_{ft}^*	design tensile force on a bolt	5.3.5.2, 5.3.5.3
N_t^*	design tensile force on the net section of a connected part using screws or blind rivets	5.4.2.2, 5.4.3.2, 5.5.2.2
N_w^*	design tensile or compressive force normal to the area of a butt weld or an arc spot weld	5.2.2.1, 5.2.4.4
n	exponent	2.5.2
n_h	number of holes in the critical plane	5.6.1
n_i	number of cycles of nominal loading event *i*, producing f_i^*	6.1.3
n_n	number of the shear planes with threads intercepting the shear plane	5.3.5.1
n_r	reference number of stress cycles (2 × 106 cycles)	6.1.3
n_{sc}	number of stress cycles	6.1.3
n_x	number of shear planes without threads intercepting the shear plane	5.3.5.1
q	intensity of the design load on a beam	4.1.1
R	modification factor for the distortional plate buckling coefficient; *or* reduction factor; *or* radius of outside bend surface	2.6.1, 3.3.3.4, 3.3.3.5, 3.6.3, 5.2.6.2
R_b	nominal capacity for concentrated load or reaction for one solid web connecting top and bottom flanges	3.3.6.1, 3.3.6.2, 3.3.7
R_d	design capacity	1.6.3, 8.4.1
$R_{min.}$	minimum value of the test results	8.2.3
R_n	nominal capacity for block shear rupture of the beam-end or tension member connection	5.7.3
R_u	nominal capacity	1.6.3
R_{wc}	web crippling capacity for channel-section flexural member	3.3.8.2
R^*	design concentrated load or reaction in the presence of bending moment	3.3.6.1, 3.3.7
R_b^*	design concentrated load or reaction	4.1.1
r	radius of gyration of the full, unreduced cross-section; *or* centre-line radius	4.1.2, Paragraph D1.1.1.2, Appendix D
r_f	ratio of the force transmitted by the bolts or screws, or rivets at the section considered, divided by the tensile force in the member at that section	5.4.2.2, 5.5.2.2
r_i	inside bend radius	1.5.1.2, 3.3.6.2
r_{o1}	polar radius of gyration of the cross-section about the shear centre	Paragraph D1.1.1.2, Appendix D
r_x, r_y	radii of gyration of the cross-section about the *x*- and *y*-axes, respectively	Paragraph D1.1.1.2, Appendix D

(*continued*)

Accessed by UNIVERSITY OF SOUTH AUSTRALIA on 03 May 2019 (Document currency not guaranteed when printed)

COPYRIGHT

TABLE 1.4 (*continued*)

Symbol	Description	Reference
r_1	radius of gyration of I-section about the axis perpendicular to the direction in which buckling occurs for the given conditions of end support and intermediate bracing	4.1.1
S	slenderness factor	2.4.2, 2.5.2, 2.7
S_e	elastic section modulus of the effective section calculated with extreme compression or tension fibre at f_y	3.3.3.5
S_f	spacing of bolts perpendicular to the line of the force, or the width of the sheet in the case of a single bolt	5.3.3
S_p	structural performance factor	1.6.4.2.4
S^*	design action effects (design actions)	5.6.3
s	fastener distance from the centre-line of the web divided by the flange width for Z-sections; flange width minus the fastener distance from the centre-line of the web divided by the flange width for channel-sections; spacing in line of the stress of welds, bolts, rivets connecting a cover plate, sheet or a non-integral stiffener in compression to another element; centre to centre hole spacing	2.2.2.2.2, 3.4.3, 4.1.3
s_{end}	clear distance from hole to end of section	2.2.2.2.2
s_f	spacing of bolts, screws or rivets perpendicular to the line of the force; *or* width of sheet, in the case of a single bolt, screw or rivet	5.3.3, 5.4.2.2, 5.5.2.2
s_g	vertical distance between two rows of connections nearest to the top and bottom flanges; *or* gauge, the distance measured at right angles to the direction of the design action in the member, centre-to-centre of holes in consecutive lines	4.1.1, 5.3.1
$s_{max.}$	maximum longitudinal spacing of welds or other connectors joining two channels to form an I-section	4.1.1
S_{od}	imperfection multiplier for distortional buckling	Paragraph B4, Appendix B
S_{ol}	imperfection multiplier for local buckling	Paragraph B4, Appendix B
s_p	staggered pitch distance measured parallel to the direction of the design action in the member, centre-to-centre of holes in consecutive lines	5.3.1
t	nominal base steel thickness of any element or section exclusive of coatings; *or* thickness of the uniformly compressed stiffened elements; *or* base thickness of beam web; *or* thickness of a channel- or Z-section; *or* thickness of the cover plate or sheet; *or* thickness of the thinnest connected part; *or* thickness of element; *or* thickness of thinnest outside sheet; *or* thickness of the connected part; *or* thickness of the holed material; *or* thickness of the part in which the end distance is measured; *or* thickness of coped web	1.3.54, 2.1.3.1, 2.2.1.2, 2.6.1, 3.3.8.1, 3.4.3, 4.1.3, 5.2.4.3, 5.2.5.2, 5.2.7, 5.3.1, 5.3.2, 5.3.4.2, 5.4.2.4, 5.5.2.4, 5.7.1
t_c	total combined base steel thickness (exclusive of coatings) of sheets involved in shear transfer	5.2.4.2
t_f	thickness of the flange	2.1.3.2

(*continued*)

Accessed by UNIVERSITY OF SOUTH AUSTRALIA on 03 May 2019 (Document currency not guaranteed when printed)

COPYRIGHT

TABLE 1.4 (*continued*)

Symbol	Description	Reference
t_p	plate thickness	6.1.3
t_s	thickness of the stiffener	3.3.8.1
t_t	design throat thickness of a butt weld	5.2.2.1, 5.2.3.4, 5.2.6.2
t_w	thickness of a web	2.1.3.4, 3.3.4.1, 3.3.6.2, 3.3.7
t_1	thickness of the connecting plate of the tensile strength f_{u1}; *or* thickness of the sheet in contact with the screw head or rivet head	5.2.3.3, 5.4.2.3, 5.5.2.3
t_2	thickness of the connecting plate of the tensile strength f_{u2}; *or* thickness of the sheet not in contact with the screw head or rivet head	5.2.3.3, 5.4.2.3, 5.5.2.3
V_b	nominal bearing capacity of the connected part	5.3.4.2, 5.3.4.3, 5.4.2.3, 5.5.2.3
V_f	nominal shear capacity of the connected part along two parallel lines in the direction of the applied force	5.3.2
V_{fv}	nominal shear capacity of a bolt or screw	5.3.5.1, 5.4.2.1, 5.5.2.1
V_n	nominal shear capacity of an arc seam weld or of a beam-end connection	5.2.5.2, 5.7.1
V_{sc}	coefficient of variation of structural characteristic	8.3.1, Tables 8.4.1(A) and 8.4.1(B)
V_v	nominal shear capacity of the web	3.3.4.1, 3.3.4.2, 3.3.5, 7.2.3
V_w	nominal shear capacity of a butt, fillet, arc spot, flare or resistance weld; *or* nominal shear force transmitted by the weld	5.2.2.2, 5.2.3.1, 5.2.4.2, 5.2.4.3, 5.2.6.2, 5.2.7
V^*	design shear force	3.3.2.3, 3.3.4.1, 3.3.5
V_b^*	design bearing force on a screw or on a rivet; *or* design bearing force on the connected part	5.4.2.3, 5.5.2.3
V_f^*	design shear force of the connected part	5.3.2
V_{fv}^*	design shear force on a bolt, screw or rivet	5.3.5.1, 5.3.5.3, 5.4.2.4
V_n^*	design shear force on an arc seam weld or a beam-end connection	5.2.5.2, 5.7.1
V_w^*	design shear force on a butt, fillet, arc spot, flare or resistance weld	5.2.2.2, 5.2.3.1, 5.2.4.2, 5.2.4.3, 5.2.6.2, 5.2.7
w	width of the specimen	Figure F1, Appendix F
w_f	feed width of the coiled or flat sheet	1.3.19, Note 2 to Figure E1, Appendix E
x, y	principal axes of the cross-section	Paragraphs D1.1.1.2 and D2.1.1, Appendix D
x_o, y_o	coordinates of the shear centre of the cross-section	Paragraphs D1.1.1.2 and D2.1.1, Appendix D
Z_c	effective section modulus calculated at a stress f_c in the extreme compression fibre	3.3.3.3
Z_e	effective section modulus calculated with the extreme compression or tension fibre at f_y	3.3.3.2.1, 3.3.3.4, 3.3.3.5
Z_f	full unreduced section modulus for the extreme compression fibre	3.3.3.2.1, 3.3.3.3
Z_{fnet}	net section modulus referred to the extreme fibre at yield	7.2.2.3.3
Z_{ft}	section modulus of the full unreduced section for the extreme tension fibre about the appropriate axis	3.5.2

(*continued*)

Accessed by UNIVERSITY OF SOUTH AUSTRALIA on 03 May 2019 (Document currency not guaranteed when printed)

COPYRIGHT

TABLE 1.4 (*continued*)

Symbol	Description	Reference
α	modification factor for type of bearing connection	5.3.4.2
α_{nx}, α_{ny}	moment amplification factors	3.5.1
α_s	inverse of the slope of the S-N curve	6.1.3
β	coefficient	2.6.2.1
β_x, β_y	monosymmetry section constant about the *x*- and *y*-axes, respectively	Paragraphs D2.1.1, Appendix D, and E2, Appendix E
β_{tf}	thickness correction factor	6.1.3
γ	importance factor	2.6.2.1
δ	coefficient	2.6.2.1
θ	angle between the plane of the web and the plane of the bearing surface	3.3.6.2
λ, λ_1, λ_2	slenderness ratio	2.2.1.2, 3.3.2.3, 3.3.7
λ_b	non-dimensional slenderness used to determine M_c for members subject to lateral buckling	3.3.3.2.1
λ_c	non-dimensional slenderness used to determine f_n; *or* non-dimensional slenderness used to determine N_{ce}	3.4.1, 3.6.3, 7.2.1.1
λ_d	non-dimensional slenderness used to determine M_c for members subject to distortional buckling; *or* non-dimensional slenderness used to determine N_{cd} and M_{bd}	3.3.3.3, 7.2.1.4.2, 7.2.2.4.2
λ_{d1}, λ_{d2}	limiting slenderness values	7.2.2.4.3
λ_l	non-dimensional slenderness used to determine N_{cl}; or non-dimensional slenderness used to determine M_{bl}	7.2.1.3.1, 7.2.2.3.2
λ_v	non-dimensional slenderness used to determine V_v	7.2.3.2, 7.2.3.3
μ	structural ductility factor	1.6.4.2.2
ν	Poisson's ratio = 0.3	2.2.1.2
ϕ	capacity reduction factor; frame imperfection (out-of-plumb)	1.5.1.4, 5.2.2.1, 5.2.2.2, 5.2.3.1, 5.2.4.2, 5.2.4.3, 5.2.5.2, 5.2.6.2, 5.2.7, 5.3.2, 5.3.3, 5.3.5.1, 5.3.5.2, 5.4.2.2, 5.4.2.3, 5.5.2.2, 5.5.2.3, 5.5.2.4, 5.7.1, 5.7.3, 6.1.3 Paragraph B2, Appendix B
ϕ_b	capacity reduction factor for bending	3.3.1, 3.5.1, 7.2.2
ϕ_c	capacity reduction factor for compression	3.3.8.1, 3.4.1, 3.5.1, 7.2.1
ϕ_t	capacity reduction factor for tension	3.2.1
ϕ_v	capacity reduction factor for shear	3.3.4.1, 7.2.3
ϕ_w	capacity reduction factor for bearing	3.3.6.1, 3.3.8.2
ρ	quantity for load capacity; *or* effective width factor	1.5.1.2, 2.2.1.2, 2.3.2.2, 2.6.1
ω_t	coefficient	2.6.3.1
ψ	stress ratio f_2^* / f_1^*	2.2.3.2, 2.3.2.2, 3.3.8.3

Accessed by UNIVERSITY OF SOUTH AUSTRALIA on 03 May 2019 (Document currency not guaranteed when printed)

COPYRIGHT

1.5 MATERIALS

1.5.1 Structural steel

1.5.1.1 *Applicable steels*

The following apply to structural members:

(a) AS/NZS 1163, AS 1397 (for Grade G550, less than 0.9 mm in thickness, [see Item (b)], AS/NZS 1594, AS/NZS 1595 and AS/NZS 3678, as appropriate. Steel marking requirements shall be followed as per the applicable Standard.

(b) Steels conforming to AS 1397, Grade 550, less than 0.9 mm in thickness may be used provided—

(i) the yield stress (f_y) used in design in Sections 2, 3, 4 and 7, and the tensile strength (f_u) used in design in Section 5 are taken as 90% of the corresponding specified values or 495 MPa, whichever is the lesser, and for steel less than 0.6 mm in thickness, the yield stress (f_y) used in design in Sections 2, 3, 4 and 7, and the tensile strength (f_u) used in design in Section 5 are taken as 75% of the corresponding specified values or 410 MPa, whichever is the lesser; or

(ii) the suitability of such steel is demonstrated by load test in accordance with Section 8.

(c) For other steels, the properties and suitability of which are in accordance with Clause 1.5.1.4 the yield stress (f_y) and tensile strength (f_u) used in design shall be determined in accordance with Section 8 and AS 1391.

1.5.1.2 *Strength increase resulting from cold-forming*

Strength increase resulting from cold-forming shall be permitted by substituting the average design yield stress (f_{ya}) of the full section for f_y. Such increase shall be limited to Clauses 3.3 (excluding Clause 3.3.3.2), 3.4, 3.5, 3.6 and 4.4. The limitations and methods for determining f_{ya} shall be as follows:

(a) For axially loaded compression members and flexural members whose proportions are such that the quantity (ρ) for load capacity is unity, as determined in accordance with Clause 2.2 for each of the component elements of the sections, the average design yield stress (f_{ya}) shall be determined on the basis of one of the following:

(i) Full section tensile tests (see Section 8).

(ii) Stub column tests (see Section 8).

(iii) The following calculation:

$$f_{ya} = Cf_{yc} + (1 - C)f_{yf} \leq f_{uv} \qquad \text{. . . 1.5.1.2(1)}$$

where

f_{ya} = average design yield stress of the steel in the full section of compression members or full flange sections of flexural members

C = for compression members, ratio of the total bend cross-sectional area to the total cross-sectional area of the full section; and for flexural members, ratio of the total bend cross-sectional area of the controlling flange to the full cross-sectional area of the controlling flange

f_{yc} = tensile yield stress of bends

$$= \frac{B_c f_{yv}}{\left(\frac{r_i}{t}\right)^m} \qquad \text{. . . 1.5.1.2(2)}$$

Accessed by UNIVERSITY OF SOUTH AUSTRALIA on 03 May 2019 (Document currency not guaranteed when printed)

COPYRIGHT

Equation 1.5.1.2(2) is applicable only if f_{uv}/f_{yv} is greater than or equal to 1.2, r_i/t is less than or equal to 7 and the minimum included angle is less than or equal to 120°.

B_c = constant

$$= 3.69\left(\frac{f_{uv}}{f_{yv}}\right) - 0.819\left(\frac{f_{uv}}{f_{yv}}\right)^2 - 1.79 \qquad \ldots 1.5.1.2(3)$$

f_{yv} = tensile yield stress of unformed steel

r_i = inside bend radius

m = constant

$$= 0.192\left(\frac{f_{uv}}{f_{yv}}\right) - 0.068 \qquad \ldots 1.5.1.2(4)$$

f_{uv} = tensile strength of unformed steel

f_{yf} = yield stress of the flat portions (see Clause 8.1.4); or yield stress of unformed steel if tests are not made

(b) For axially loaded tension members, f_{ya} shall be determined by either Item (a)(i) or Item (a)(iii).

1.5.1.3 *Effect of welding*

The effect of any welding on the mechanical properties of a member shall be determined on the basis of tests on specimens of the full section containing the weld within the gauge length. Any necessary allowance for such effect shall be made in the structural use of the member.

Welded connections for all grades conforming with AS/NZS 1163 and grades G250, G300, G350, G450, G500 and G550 ($t > 0.6$ mm) steel conforming with AS 1397, designed in accordance with Clause 5.2.2 for butt welds, Clause 5.2.3 for fillet welds and Clause 5.2.6 for flare welds do not require further testing providing the f_u of 425 MPa is used for G500 steel and f_u of 450 MPa is used for G550 steel.

1.5.1.4 *Ductility*

Steels not listed in Clause 1.5.1.1(a) and used for forming structural members and connections shall conform to the following requirements:

(a) The ratio of tensile strength to yield stress shall be not less than 1.05.

(b) The total elongation shall be not less than 10% for a 50 mm gauge length or 7% for a 200 mm gauge length standard specimen tested in accordance with AS 1391.

(c) If these requirements cannot be met, the following criteria shall be satisfied:

(i) Local elongation in a 13 mm gauge length across the fracture shall be not less than 20%.

(ii) Uniform elongation outside the fracture shall be not less than 3%.

1.5.1.5 *Acceptance of steels*

The marking of steels shall be as specified in the appropriate Standard in Clause 1.5.1.1(a).

The uncoated minimum steel thickness at any location of the cold-formed product, as delivered to the job site, shall be not less than 95% of the value used in its design. However, lesser thicknesses shall be permitted at bends (forming corners) due to cold-forming effects.

Accessed by UNIVERSITY OF SOUTH AUSTRALIA on 03 May 2019 (Document currency not guaranteed when printed)

COPYRIGHT

1.5.1.6 *Unidentified steel*

If unidentified steel is used, it shall be free from surface imperfections and shall be used only where the particular physical properties of the steel and its weldability will not adversely affect the design capacities and serviceability of the structure. Unless a full test in accordance with AS 1391 is made, the yield stress of the steel used in design (f_y) shall be 170 MPa or less, and the tensile strength used in design (f_u) shall be 300 MPa or less.

1.5.2 Design stresses

The minimum yield stress (f_y) and tensile strength (f_u) used in design shall not exceed the values given in Table 1.5.2 for the appropriate steel grade or Clause 1.5.1.1(c).

NOTE: Regardless of the closeness of yield stress and tensile strength of some steels, steel grades given in Table 1.5.2 are suitable for cold-forming provided that an appropriate inside bend radius (r_i) is chosen.

Accessed by UNIVERSITY OF SOUTH AUSTRALIA on 03 May 2019 (Document currency not guaranteed when printed)

COPYRIGHT

TABLE 1.5.2

MINIMUM STRENGTHS OF STEELS CONFORMING TO AS/NZS 1163, AS 1397, AS/NZS 1594, AS/NZS 1595 AND AS/NZS 3678

Applicable Standard	Grade	Yield stress (f_y) MPa	Tensile strength (f_u) MPa
AS/NZS 1163	C250 and C250L0	250	320
	C350 and C350L0	350	430
	C450 and C450L0	450	500
AS 1397	G250	250	320
	G300	300	340
	G350	350	420
	G450*	450	480
	G500†	500	520
	G550‡ (t ≥ 0.9 mm)	550	550
	G550‡ (0.9 mm > t ≥ 0.6 mm)	495	495
	G550‡ (t < 0.6 mm)	413	413
AS/NZS 1594	HA1	(see Note)	(see Note)
	HA3	200	300
	HA4N	170	280
	HA200	200	300
	HA250, HU250	250	350
	HA250/1	250	350
	HA300, HU300	300	400
	HA300/1, HU300/1	300	430
	HW350	350	430
	HW350	340	450
	HA400	380	460
	XF300	300	440
	XF400	380	460
	XF500	480	570
AS/NZS 1595	CA220	210	340
	CA260	250	350
	CW300	300	450
	CA350	350	430
	CA500	500	510
AS/NZS 3678	200 (t ≤ 8 mm)	200	300
	200 (8 mm < t ≤ 12 mm)	200	300
	250, 250L15 (t ≤ 8 mm)	280	410
	250, 250L15 (8 mm < t ≤ 12 mm)	260	410
	250, 250L15 (12 mm < t ≤ 20 mm)	250	410
	250, 250L15 (20 mm < t ≤ 25 mm)	250	410
	300, 300L15 (t ≤ 8 mm)	320	430
	300, 300L15 (8 mm < t ≤ 12 mm)	310	430
	300, 300L15 (12 mm < t ≤ 20 mm)	300	430
	300, 300L15 (20 mm < t ≤ 25 mm)	280	430
	350, 350L15 (t ≤ 8 mm)	360	450
	350, 350L15 (8 mm < t ≤ 12 mm)	360	450
	350, 350L15 (12 mm < t ≤ 20 mm)	350	450
	350, 350L15 (20 mm < t ≤ 25 mm)	340	450

(*continued*)

Accessed by UNIVERSITY OF SOUTH AUSTRALIA on 03 May 2019 (Document currency not guaranteed when printed)

COPYRIGHT

TABLE 1.5.2 (*continued*)

Applicable Standard	Grade	Yield stress (f_y) MPa	Tensile strength (f_u) MPa
	400, 400L15 ($t \leq 8$ mm)	400	480
	400, 400L15 (8 mm < $t \leq 12$ mm)	400	480
	400, 400L15 (12 mm < $t \leq 20$ mm)	380	480
	400, 400L15 (20 mm < $t \leq 25$ mm)	360	480
	450, 450L15 ($t \leq 8$ mm)	450	520
	450, 450L15 (8 mm < $t \leq 12$ mm)	450	520
	450, 450L15 (12 mm < $t \leq 20$ mm)	450	520
	450, 450L15 (20 mm < $t \leq 25$ mm)	420	500
	WR350, WR350/L0 ($t \leq 8$ mm)	340	450
	WR350, WR350/L0 (8 mm < $t \leq 12$ mm)	340	450
	WR350, WR350/L0 (12 mm < $t \leq 20$ mm)	340	450
	WR350, WR350/L0 (20 mm < $t \leq 25$ mm)	340	450

* Applies to hard-rolled material of thickness greater than or equal to 1.5 mm.
† Applies to hard-rolled material of thickness greater than 1.0 mm but less than 1.5 mm.
‡ Applies to hard-rolled material of thickness less than or equal to 1.0 mm.

NOTE: For design purposes, yield and tensile strengths approximate those of structural Grade HA200. For specific information contact the supplier.

1.5.3 Fasteners and electrodes

1.5.3.1 *Steel bolts, nuts and washers*

Steel bolts, nuts and washers shall conform to AS 1110.1, AS 1111.1, AS 1112.1, AS 1112.2, AS 1112.3, AS 1112.4, AS/NZS 1252.1 and AS 4291.1 (ISO 898-1), as appropriate.

High-strength fasteners, other than those conforming to AS/NZS 1252.1, may be used, provided that evidence of their equivalence to high-strength bolts conforming to AS/NZS 1252.1 is available.

1.5.3.2 *Welding consumables*

All welding consumables shall conform to AS/NZS 1554.1, AS/NZS 1554.5 and AS/NZS 1554.7, as appropriate.

1.5.3.3 *Screws*

Self-drilling screws shall conform to AS 3566.1 and AS 3566.2.

1.5.3.4 *Blind rivets*

Blind rivets shall conform to the Industrial Fastener Institute document, IFI 114.

1.6 DESIGN REQUIREMENTS

1.6.1 Actions and combination of actions

A structure and its components shall be designed for the actions and combination of actions as specified in AS/NZS 1170.0 or NASH Standard—*Residential and Low-rise Steel Framing, Part 1: Design Criteria*.

1.6.2 Structural analysis and design

Structural analysis and design shall be in accordance with AS/NZS 1170.0. First and second order elastic analyses as well as advanced analysis are used as defined in Appendix B. In the application of the combined compression and bending equations in Clause 3.5.1, first order elastic analysis according to Paragraph B2, Appendix B, shall be used. In the application of the combined compression and bending equations in Clause 7.2.4, second order elastic analysis according to Paragraph B3, Appendix B, shall be used.

Accessed by UNIVERSITY OF SOUTH AUSTRALIA on 03 May 2019 (Document currency not guaranteed when printed)

COPYRIGHT

Alternatively, first order elastic analysis may be used with Clause 7.2.4 provided the combined compression and bending equations in Clause 3.5.1 are used.

NOTE: Advanced analysis may be used for the prequalified systems in Paragraph B4, Appendix B in lieu of the member design methods given in Sections 3 and 7.

1.6.3 Design capacity

The design capacity (R_d) shall be determined by any one of the following:

(a) The nominal capacity (R_u) in accordance with Sections 2 to 7 and the capacity reduction factor (ϕ) given in Table 1.6.3 as appropriate, i.e. $R_d = \phi R_u$.

(b) Testing in accordance with Clause 8.4.

(c) Where the composition or configuration of such components is such that Item (a) or (b) cannot be made in accordance with those provisions, structural performance shall be established from the design capacity or stiffness by rational engineering analysis based on appropriate theory, related testing if data is available and engineering judgement. Specifically, the design capacity shall be determined from the calculated nominal capacity by applying the following capacity reduction factors:

(i) For members ..... $\phi = 0.80$.

(ii) For connections ..... $\phi = 0.65$.

(d) Advanced analysis for prequalified structures in accordance with Paragraph B4, Appendix B.

1.6.4 Earthquake design

1.6.4.1 *For Australia*

All structures shall be designed for the actions and combination of actions specified in AS 1170.4—2007. If cold-formed steel members are used as the primary earthquake resistance element, then the structural ductility factor (μ) shall be as specified in Clause 1.6.4.2.2, and the structural performance factor (S_p) shall be as specified in Clause 1.6.4.2.4.

NOTE: If higher values of μ are to be used, reference should be made to NZS 1170.5 as in Clause 1.6.4.2.3.

The design action effects for earthquake loads shall be obtained using either the equivalent static analysis of Section 6 of AS 1170.4—2007 or the dynamic analysis of Section 7 of AS 1170.4—2007.

1.6.4.2 *For New Zealand and limited application in Australia*

1.6.4.2.1 *General*

All structures shall be designed for the actions specified in NZS 1170.5 and combination of actions specified in AS/NZS 1170.0, subject to the limitations specified in Clauses 1.6.4.2.2 to 1.6.4.2.4.

1.6.4.2.2 *Structural ductility factor*

For the ultimate limit state, the structural ductility factor (μ) shall be taken as follows:

(a) For seismic-resisting systems involving an assemblage of elements acting as a single unit, μ shall be less than or equal to 1.25.

(b) For seismic-resisting systems using semi-rigid connections, μ shall be less than or equal to 1.25.

(c) Where a special study is undertaken (see Clause 1.6.4.2.3), μ may be increased, but shall not be greater than 4.0 when deflection-limited performance at serviceability is required and not greater than 6.0 in other cases.

Accessed by UNIVERSITY OF SOUTH AUSTRALIA on 03 May 2019 (Document currency not guaranteed when printed)

COPYRIGHT

(d) For all other earthquake-resisting systems, $\mu = 1.0$.

For the serviceability limit state, $\mu = 1.0$.

NOTES:

1 An example of an assemblage of elements is a braced wall panel, where the whole panel and its attachments at the top and base contribute to the earthquake resistance.

2 Earthquake resisting systems using semi-rigid connections cover frames with connections that are flexurally weaker than the members framing into the connection.

1.6.4.2.3 *Special studies*

Where it is demonstrated by special study that μ for a particular structural system is greater than 1.25, then—

(a) μ shall be based specifically from the special study including—

(i) structural form and configuration under consideration;

(ii) ductility of the material;

(iii) location of yielding regions of the structure;

(iv) structural damping characteristics involved in the structural system; and

(v) need to provide the structure with a small margin against collapse under the maximum considered event in accordance with NZS 1170.5;

(b) where μ greater than 1.25 is applicable to a design, then capacity design shall be used in order to protect elements of the earthquake resisting system from inelastic demands beyond their capability to dependably resist such demands; and

(c) for buildings containing one or more suspended floors, capacity design principles shall be used to suppress inelastic demand in individual column members.

1.6.4.2.4 *Structural performance factor*

When considering lateral stability of a whole structure, the structural performance factor (S_p) shall be taken as 1.0.

For the ultimate limit state, S_p shall be taken as follows:

(a) Where μ is less than or equal to 2.0, but not less than 1.0—

$$S_p = 1.3 - 0.3\mu \qquad \text{. . . 1.6.4.2.4}$$

(b) Where μ is greater than 2.0, then $S_p = 0.70$.

For the serviceability limit state, $S_p = 0.70$.

1.6.5 Durability

1.6.5.1 *General*

A structure shall be designed to perform its required functions during its expected life.

Where steelwork in a structure is to be exposed to a corrosive environment, the steelwork shall be given protection against corrosion. The degree of protection shall be determined after consideration has been given to the use of the structure, its maintenance and the climatic or other local conditions.

1.6.5.2 *Corrosion protection*

NOTE: Corrosion protection should conform to AS/NZS 2311 and AS/NZS 2312, as appropriate. For further information, see Appendix C. Additional information is available in NASH Standard, *Residential and Low-rise Steel Framing, Part 2: Design Solutions*.

Accessed by UNIVERSITY OF SOUTH AUSTRALIA on 03 May 2019 (Document currency not guaranteed when printed)

COPYRIGHT

TABLE 1.6.3
CAPACITY REDUCTION FACTOR

Design capacity	Reference	Capacity reduction factor (ϕ)
(a) Stiffeners:	3.3.8	
Transverse stiffeners (ϕ_c)	3.3.8.1	0.85
Bearing stiffeners (ϕ_w)	3.3.8.2	0.90
Shear stiffeners (ϕ_v)	3.3.8.3	0.90
(b) Members subject to axial tension (ϕ_t)	3.2	0.90
(c) Members subject to bending:	3.3	
Section moment capacity—	3.3.2	
for sections with stiffened or partially stiffened compression flanges (ϕ_b)	3.3.2	0.95
for sections with unstiffened compression flanges (ϕ_b)	3.3.2	0.90
Member moment capacity—	3.3.3	
members subject to lateral buckling (ϕ_b)	3.3.3.2	0.90
members subject to distortional buckling (ϕ_b)	3.3.3.3	0.90
beams having one flange through-fastened to sheeting (channel or Z-sections) (ϕ_b)	3.3.3.4	0.90
Web design—		
shear (ϕ_v)	3.3.4	0.90
Bearing (ϕ_w)—	3.3.6	
for back-to-back sections	Table 3.3.6.2(A)	0.75–0.90
for single web channel-sections and C-sections	Table 3.3.6.2(B)	0.75–0.90
for single web Z-sections	Table 3.3.6.2(C)	0.75–0.90
for single hat sections	Table 3.3.6.2(D)	0.75–0.90
for multiple web deck sections	Table 3.3.6.2(E)	0.60–0.90
(d) Concentrically loaded compression members (ϕ_c)	3.4	0.85
(e) Combined axial load and bending:	3.5	
Compression (ϕ_c)	3.5.1	0.85
Bending (ϕ_b)—	3.5.1	
using Clause 3.3.2		0.90 or 0.95
using Clause 3.3.3.1		0.90
(f) Cylindrical tubular members:	3.6	
Bending (ϕ_b)	3.6.2	0.95
Compression (ϕ_c)	3.6.3	0.85
(g) Welded connections:	5.2	
Butt welds—	5.2.2	
tension or compression	5.2.2.1	0.90
shear	5.2.2.2(a)	0.80
shear (base metal)	5.2.2.2(b)	0.90

(*continued*)

Accessed by UNIVERSITY OF SOUTH AUSTRALIA on 03 May 2019 (Document currency not guaranteed when printed)

COPYRIGHT

TABLE 1.6.3 (*continued*)

Design capacity	Reference	Capacity reduction factor (ϕ)
Fillet welds—	5.2.3	
longitudinal loading	5.2.3.2	0.55 or 0.60
transverse loading	5.2.3.3	0.60
Arc spot welds (puddle welds)—	5.2.4	
shear (welds)	5.2.4.2(a)	0.60
shear (connected part)	5.2.4.2(b)	0.50 or 0.60
shear (tearout)	5.2.4.3	0.60 or 0.70
tension	5.2.4.4	0.65
Arc seam welds—	5.2.5	
shear (welds)	5.2.5.2(a)	0.60
shear (connected part)	5.2.5.2(b)	0.60
Flare welds—	5.2.6	
transverse loading	5.2.6.2(a)	0.55
longitudinal loading	5.2.6.2(b)	0.55
Resistance welds—	5.2.7	
spot welds	5.2.7(a)	0.65
(h) Bolted connections:	5.3	
Tearout	5.3.2	0.60 or 0.70
Net section tension	5.3.3	0.80
Bearing	5.3.4	0.60
Bolts—	5.3.5	
bolt in shear	5.3.5.1	0.80
bolt in tension	5.3.5.2	0.80
(i) Screwed connections:	5.4	
Screwed connections in shear—	5.4.2	
tension in the connected part	5.4.2.3	0.65
tilting and hole bearing	5.4.2.4	0.5
tearout (limited by end distance)	5.4.2.5	0.60 or 0.70
Screwed connections in tension—	5.4.3	
pull-out of connected parts	5.4.3.2	0.5
pull-over (pull-through) of connected parts	5.4.3.2	0.5
(j) Power-actuated fasteners:	5.5	
Power-actuated fasteners in tension—	5.5.2	
PAF in tension	5.5.3.1	0.60
Pull-out	5.5.3.3	0.40
Pull-over	5.5.3.4	0.50
Power-actuated fastener in shear—	5.5.4	
Shear strength	5.5.4.2	0.60
Bearing and tilting strength	5.5.4.3	0.80

(*continued*)

Accessed by UNIVERSITY OF SOUTH AUSTRALIA on 03 May 2019 (Document currency not guaranteed when printed)

COPYRIGHT

TABLE 1.6.3 (*continued*)

Design capacity	Reference	Capacity reduction factor (ϕ)
Pull-out strength	5.5.4.4	0.65
(k) Blind riveted connections:	5.6	
Riveted connections in shear—	5.6.2	
tension in the connected part	5.6.2.2	0.65
tilting and hole bearing	5.6.2.3	0.50
tearout	5.6.2.4	0.65
(l) Rupture:		
Shear rupture	5.7.1	0.75
Block shear rupture (bolted connections)	5.7.3	0.80

Accessed by UNIVERSITY OF SOUTH AUSTRALIA on 03 May 2019 (Document currency not guaranteed when printed)

COPYRIGHT

SECTION 2 ELEMENTS

2.1 SECTION PROPERTIES

2.1.1 General

Properties of sections, such as cross-sectional area, second moment of area, section modulus, radius of gyration, and centroid, shall be determined in accordance with conventional methods by division of the section shape into simple elements, including bends.

Properties shall be based on nominal dimensions and nominal base steel thickness (see Clause 1.5.1.6).

2.1.2 Design procedures

2.1.2.1 *Full section properties*

Properties of full, unreduced sections shall be based on the entire simplified shape with the flats and bends located along the element mid-lines unless the manufacturing process warrants consideration of a more accurate method.

To calculate the stability of members, a simplified shape where the bends are eliminated and the section is represented by straight mid-lines may be used when calculating the following properties:

(a) Parameters for distortional buckling (see Appendix D).

(b) Location of shear centre (see Paragraph E1 of Appendix E).

(c) Warping constant (see Paragraph E1 of Appendix E).

(d) Monosymmetry section constant (see Paragraph E2 of Appendix E).

2.1.2.2 *Effective section properties*

For the design of cold-formed members with slender elements by the effective width method, the area of the sections shall be reduced at specified locations.

The reduction of the area is required to—

(a) compensate for the effects of shear lag (see Clause 2.1.3.3); and

(b) compensate for local instabilities of elements in compression (see Clauses 2.2 to 2.5).

2.1.2.3 *Location of reduced width*

The location of reduced width shall be determined as follows:

(a) For the design of uniformly compressed stiffened elements, the location of the lost portion shall be taken at the middle of the element (see Figures 2.2.1 and 2.4.2(b)).

(b) For the design of stiffened elements under a stress gradient or where only a part of the element is in compression (e.g. the webs), the location of the lost portion shall be as shown in Figure 2.2.3.

(c) For unstiffened elements, under either a stress gradient or uniform compression, the lost portion shall be taken at the unstiffened edge as shown in Figure 2.3.1. If the unstiffened element is subjected to both tension and compression across its width, the lost portion may be taken as specified in Clause 2.3.2.

(d) For the design of elements with an edge stiffener, the location of the lost portion shall be as shown in Figure 2.4.2.

Accessed by UNIVERSITY OF SOUTH AUSTRALIA on 03 May 2019 (Document currency not guaranteed when printed)

COPYRIGHT

2.1.3 Dimensional limits

2.1.3.1 *Maximum flat-width-to-thickness ratios for use with the effective width method*

The maximum overall flat-width-to-thickness ratios (b/t), disregarding intermediate stiffeners and taking t as the nominal thickness of the element, shall be as follows:

(a) For a stiffened compression element having one longitudinal edge connected to a web or flange element and the other stiffened by—

(i) simple lip ..... 60; and

(ii) any other kind of stiffener when—

(A) $I_s < I_a$ ..... 60; and

(B) $I_s \geq I_a$ ..... 90.

(b) For a stiffened compression element with both longitudinal edges connected to other stiffened elements ..... 500.

(c) For a unstiffened compression element ..... 60.

NOTE: Unstiffened compression elements with b/t ratios greater than 30 and stiffened compression elements with b/t ratios greater than 250 are likely to develop noticeable deformation at the full design load, without affecting the ability of the member to carry the design load. Stiffened elements with b/t ratios greater than 500 can be used with adequate design capacity to sustain the design loads. However, substantial deformations of such elements usually will invalidate the design equations of this Standard.

2.1.3.2 *Flange curling*

Where the flange of a flexural member is unusually wide and it is desired to limit the maximum amount of curling or movement of the flange toward the neutral axis, the maximum width (b_1) of the compression and tension flanges, either stiffened or unstiffened projecting beyond the web for I-beams and similar sections or the maximum half distance (b_1) between webs for box- or U-type beams, shall be determined from the following equation:

$$b_1 = \sqrt{\frac{0.061 t_f d E}{f^*_{av}}} \sqrt[4]{\frac{100 c_f}{d}} \qquad \text{. . . 2.1.3.2}$$

where

t_f = thickness of the flange

d = depth of the section

f^*_{av} = average design stress in the full, unreduced flange width (see Note 1)

c_f = amount of curling (see Note 2)

NOTES:

1 Where members are designed by the effective design width procedure, the average stress equals the maximum stress multiplied by the ratio of the effective design width to the actual width.

2 The amount of curling that can be tolerated will vary with different kinds of sections and should be established by the designer. Amount of curling in the order of 5% of the depth of the section is usually not considered excessive.

2.1.3.3 *Shear lag effects (usually short spans supporting concentrated loads)*

Where the span of the beam (l) is less than $30b_1$ and the beam carries one concentrated load, or several loads spaced greater than $2b_1$, the effective design width of any flange, whether in tension or compression, shall be limited to the values given in Table 2.1.3.3.

Accessed by UNIVERSITY OF SOUTH AUSTRALIA on 03 May 2019 (Document currency not guaranteed when printed)

COPYRIGHT

For flanges of I-beams and similar sections stiffened by lips at the outer edges, b_1 shall be taken as the sum of the flange projection beyond the web and the depth of the lip.

TABLE 2.1.3.3

MAXIMUM RATIO OF EFFECTIVE DESIGN WIDTH TO ACTUAL WIDTH FOR SHORT WIDE FLANGE BEAMS

l/b_1	Ratio	l/b_1	Ratio
30	1.00	14	0.82
25	0.96	12	0.78
20	0.91	10	0.73
18	0.89	8	0.67
16	0.86	6	0.55

LEGEND:

l = full span for simple beams; *or*
distance between inflection points for continuous beams; *or*
twice the length of cantilever beams

2.1.3.4 *Maximum web depth-to-thickness ratio*

The maximum web depth-to-thickness ratio (d_1/t_w) of flexural members shall not exceed the following:

(a) For unreinforced webs—d_1/t_w .....200.

(b) For webs with transverse stiffeners conforming to Clause 3.3.8.1—

(i) if using bearing stiffeners only—d_1/t_w..... 260; and

(ii) if using bearing stiffeners and intermediate stiffeners—d_1/t_w 300;

where

d_1 = depth of the flat portion of the web measured along the plane of the web

t_w = thickness of web

Where a web consists of two or more sheets, the ratio d_1/t_w shall be calculated for each sheet.

2.2 EFFECTIVE WIDTHS OF STIFFENED ELEMENTS

2.2.1 Uniformly compressed stiffened elements

2.2.1.1 *General*

For uniformly compressed stiffened elements (see Figure 2.2.1), the effective widths for section or member capacity and deflection calculations shall be determined in accordance with Clauses 2.2.1.2 and 2.2.1.3 respectively.

2.2.1.2 *Effective width for capacity calculations*

For determining the section or member capacity, the effective widths (b_e) of uniformly compressed stiffened elements shall be determined from Equation 2.2.1.2(1) or Equation 2.2.1.2(2), as appropriate.

For $\lambda \leq 0.673$: $b_e = b$ . . . 2.2.1.2(1)

For $\lambda > 0.673$: $b_e = \rho b$ . . . 2.2.1.2(2)

Accessed by UNIVERSITY OF SOUTH AUSTRALIA on 03 May 2019 (Document currency not guaranteed when printed)

COPYRIGHT

where

b = flat width of element excluding radii (see in Figure 2.2.1(a))

ρ = effective width factor

$$= \frac{\left(1 - \frac{0.22}{\lambda}\right)}{\lambda} \leq 1.0 \qquad \text{. . . 2.2.1.2(3)}$$

The slenderness ratio (λ) shall be determined as follows:

$$\lambda = \sqrt{\frac{f^*}{f_{cr}}} \qquad \text{. . . 2.2.1.2(4)}$$

where

f^* = design stress in the compression element calculated on the basis of the effective design width (see Figure 2.2.1(b))

f_{cr} = plate elastic buckling stress

$$= \left(\frac{k\pi^2 E}{12\left(1-\nu^2\right)}\right)\left(\frac{t}{b}\right)^2 \qquad \text{. . . 2.2.1.2(5)}$$

k = plate buckling coefficient

= 4 for stiffened elements supported by a web on each longitudinal edge (k values for different types of elements are given in the applicable clauses)

E = Young's modulus of elasticity (200×10^3 MPa)

ν = Poisson's ratio

= 0.3

t = thickness of the uniformly compressed stiffened elements

Alternatively, the plate buckling coefficient (k) for each flat element may be determined from a rational elastic buckling analysis of the whole section as a plate assemblage subjected to the longitudinal stress distribution in the section prior to buckling.

(a) Actual element

(b) Effective width (b_e) of element and design stress (f^*) on effective element

FIGURE 2.2.1 STIFFENED ELEMENTS WITH UNIFORM COMPRESSION

For determining the nominal section or member capacity of flexural members, the design stress $\left(f^*\right)$ shall be taken as follows:

Accessed by UNIVERSITY OF SOUTH AUSTRALIA on 03 May 2019 (Document currency not guaranteed when printed)

(a) If the nominal section moment capacity (M_s) is based on initiation of yielding as specified in Clause 3.3.2.2, and the initial yielding of the element being considered is in compression, then f^* shall be equal to f_y. If the initial yielding of the section is in tension, then f^* of the element being considered shall be determined on the basis of the effective section at M_y (moment causing initial yield).

(b) If the nominal section moment capacity (M_s) is based on inelastic reserve capacity as specified in Clause 3.3.2.3, then f^* shall be the stress of the element being considered at M_s. The effective section shall be used to determine M_s.

(c) If the nominal member moment capacity (M_b) is based on lateral buckling as specified in Clause 3.3.3.2 or on distortional buckling as specified in Clause 3.3.3.3, then f^* shall be equal to f_c as described in Clauses 3.3.3.2 and 3.3.3.3 in determining Z_c.

For determining the nominal section or member compression capacity, f^* shall be taken as follows:

(i) If the nominal section capacity (N_s) of the member in compression is based on initiation of yielding as specified in Clause 3.4, then f^* shall be equal to f_y.

(ii) If the nominal member capacity (N_c) of the member in compression is based on flexural, torsional or flexural-torsional buckling as specified in Clause 3.4, then f^* shall be equal to f_n, as specified in Clauses 3.4.1 and 3.4.6.

2.2.1.3 *Effective width for deflection calculations*

For determining the deflection, the effective widths (b_{ed}) shall be determined from Equation 2.2.1.3(1) or Equation 2.2.1.3(2), as appropriate.

For $\lambda \le 0.673$: $b_{ed} = b$ . . . 2.2.1.3(1)

For $\lambda > 0.673$: $b_{ed} = \rho b$ . . . 2.2.1.3(2)

The effective width factor (ρ) shall be determined by either of the following two procedures:

(a) *Procedure I* A low estimate of the effective width may be obtained from Equations 2.2.1.2(3) and 2.2.1.2(4), except that f_d^* is substituted for f^* where f_d^* is the design compressive stress in the element being considered based on the effective section at the load for which deflections are determined.

(b) *Procedure II* For stiffened elements supported by a web on each longitudinal edge, an improved estimate of the effective width can be obtained by calculating ρ from Equations 2.2.1.3(3) to 2.2.1.3(5), as appropriate.

For $\lambda \le 0.673$: $\rho = 1$ . . . 2.2.1.3(3)

For $0.673 < \lambda < \lambda_c$: $$\rho = \frac{1.358 - \dfrac{0.461}{\lambda}}{\lambda} \le 1.0$$ . . . 2.2.1.3(4)

For $\lambda \ge \lambda_c$: $$\rho = \frac{0.41 + 0.59\sqrt{\dfrac{f_y}{f_d^*}} - \dfrac{0.22}{\lambda}}{\lambda} \le 1.0$$ . . . 2.2.1.3(5)

$$\lambda_c = 0.256 + 0.328\left(\frac{b}{t}\right)\sqrt{\frac{f_y}{E}}$$ . . . 2.2.1.3(6)

where λ shall be calculated from Equation 2.2.1.2(4) except that f_d^* is substituted for f^*.

Accessed by UNIVERSITY OF SOUTH AUSTRALIA on 03 May 2019 (Document currency not guaranteed when printed)

COPYRIGHT

2.2.2 Uniformly compressed stiffened elements with circular or non-circular holes

2.2.2.1 *General*

For uniformly compressed stiffened elements with circular holes or non-circular holes, the effective widths for section or member capacity and deflection calculations shall be determined in accordance with Clauses 2.2.2.2 and 2.2.2.3, respectively.

2.2.2.2 *Effective width for capacity calculations*

2.2.2.2.1 *For circular holes*

For determining the section or member capacity, where $0.50 \geq d_h/b \geq 0$ and $b/t \leq 70$, and the centre-to-centre spacing of holes $>0.5b$ and $>3d_h$, the effective width (b_e) of uniformly compressed stiffened elements with circular holes shall be determined from Equation 2.2.2.2.1(1) or Equation 2.2.2.2.1(2), as appropriate.

For $\lambda \leq 0.673$: $$b_e = b - d_h \qquad \text{. . . 2.2.2.2.1(1)}$$

For $\lambda > 0.673$: $$b_e = \frac{b\left(1 - \frac{0.22}{\lambda} - \frac{0.8d_h}{b} + \frac{(0.085d_h)}{b\lambda}\right)}{\lambda} \leq b - d_h \qquad \text{. . . 2.2.2.2.1(2)}$$

where d_h is the diameter of holes and λ shall be calculated in accordance with Clause 2.2.1.2.

The value of b_e shall not exceed $(b - d_h)$.

2.2.2.2.2 *For non-circular holes*

A uniformly compressed stiffened element with non-circular holes shall be assumed to consist of two unstiffened strips of flat width, c, adjacent to the holes (additional notation in this Clause is illustrated in Figure 2.2.2). The effective width b_e of each unstiffened strip adjacent to the hole shall be determined in accordance with Clause 2.2.1.2 except that the plate buckling coefficient, k, shall be taken as 0.43, and b as c. These provisions shall be applicable within the following limits:

(a) Centre-to-centre hole spacing ..... $s \geq 600$ mm.

(b) Clear distance from the hole at the ends ..... $s_{end} \geq 250$ mm.

(c) Depth of hole ..... $d_h \leq 65$ mm.

(d) Length of hole ..... $L_h \leq 115$ mm.

(e) Ratio of depth of hole, d_h, to the out-to-out width, b_o ..... $d_h/b_o \leq 0.5$.

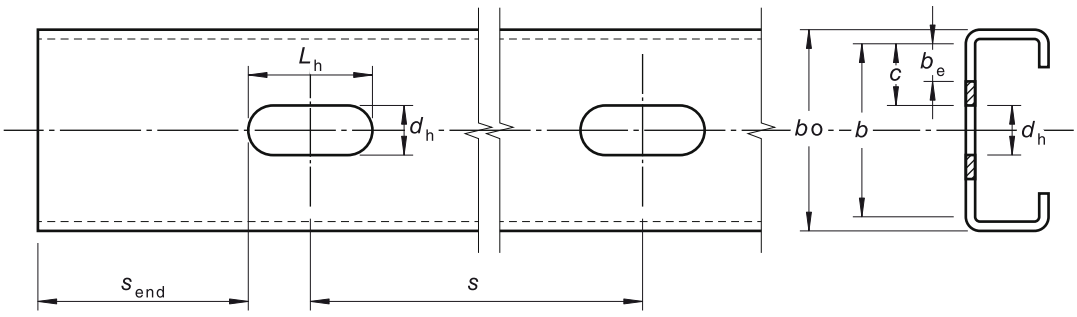

FIGURE 2.2.2 UNIFORMLY STIFFENED ELEMENTS WITH NON-CIRCULAR HOLES

Accessed by UNIVERSITY OF SOUTH AUSTRALIA on 03 May 2019 (Document currency not guaranteed when printed)

COPYRIGHT

2.2.2.3 *Effective width for deflection calculations*

For determining the deflection, the effective width (b_{ed}) shall be equal to be determined in accordance with Procedure I of Clause 2.2.1.3 except that f_d^* is substituted for f^* where f_d^* is the design compressive stress of the element being considered, based on the effective section at the load for which deflections are determined.

2.2.3 Stiffened elements with stress gradient

2.2.3.1 *General*

For stiffened elements with stress gradient (see Figure 2.2.3), the effective widths for section or member capacity and deflection calculations shall be determined in accordance with Clauses 2.2.3.2 and 2.2.3.3, respectively.

2.2.3.2 *Effective width for capacity calculations*

For determining the section or member capacity, the effective width (b_{e1}) (see Figure 2.2.3) shall be determined from the following:

$$b_{e1} = \frac{b_e}{3 - \psi} \qquad \text{. . . 2.2.3.2(1)}$$

The effective width (b_{e2}) (see Figure 2.2.3) shall be determined from Equation 2.2.3.2(2) or Equation 2.2.3.2(3), as appropriate.

$$\text{For } \psi \le -0.236 : b_{e2} = \frac{b_e}{2} \qquad \text{. . . 2.2.3.2(2)}$$

$$\text{For } \psi > -0.236 : b_{e2} = b_e - b_{e1} \qquad \text{. . . 2.2.3.2(3)}$$

where

b_e = effective width determined in accordance with Clause 2.2.1.2 with f_1^* substituted for f^* and with k determined as follows:

$$k = 4 + 2(1 - \psi)^3 + 2(1 - \psi) \qquad \text{. . . 2.2.3.2(4)}$$

$$\psi = \frac{f_2^*}{f_1^*} \qquad \text{. . . 2.2.3.2(5)}$$

f_1^*, f_2^* = web stresses calculated on the basis of the effective section (see Figure 2.2.3)

f_1^* is compression (+) and f_2^* may be either tension (–) or compression (+). In case f_1^* and f_2^* are both compression, f_1^* shall be greater than or equal to f_2^*.

In addition, ($b_{e1} + b_{e2}$) shall not exceed the compression portion of the web calculated on the basis of effective section.

2.2.3.3 *Effective width for deflection calculations*

For determining the deflection, the effective widths (b_{e1}) and (b_{e2}) shall be determined in accordance with Clause 2.2.3.2 except that f_{d1}^* and f_{d2}^* are substituted for f_1^* and f_2^*. The calculated stresses f_1^* and f_2^* (see Figure 2.2.3) shall be used to determine f_{d1}^* and f_{d2}^*, respectively. Calculations shall be based on the effective section for the load for which deflections are determined.

Accessed by UNIVERSITY OF SOUTH AUSTRALIA on 03 May 2019 (Document currency not guaranteed when printed)

COPYRIGHT

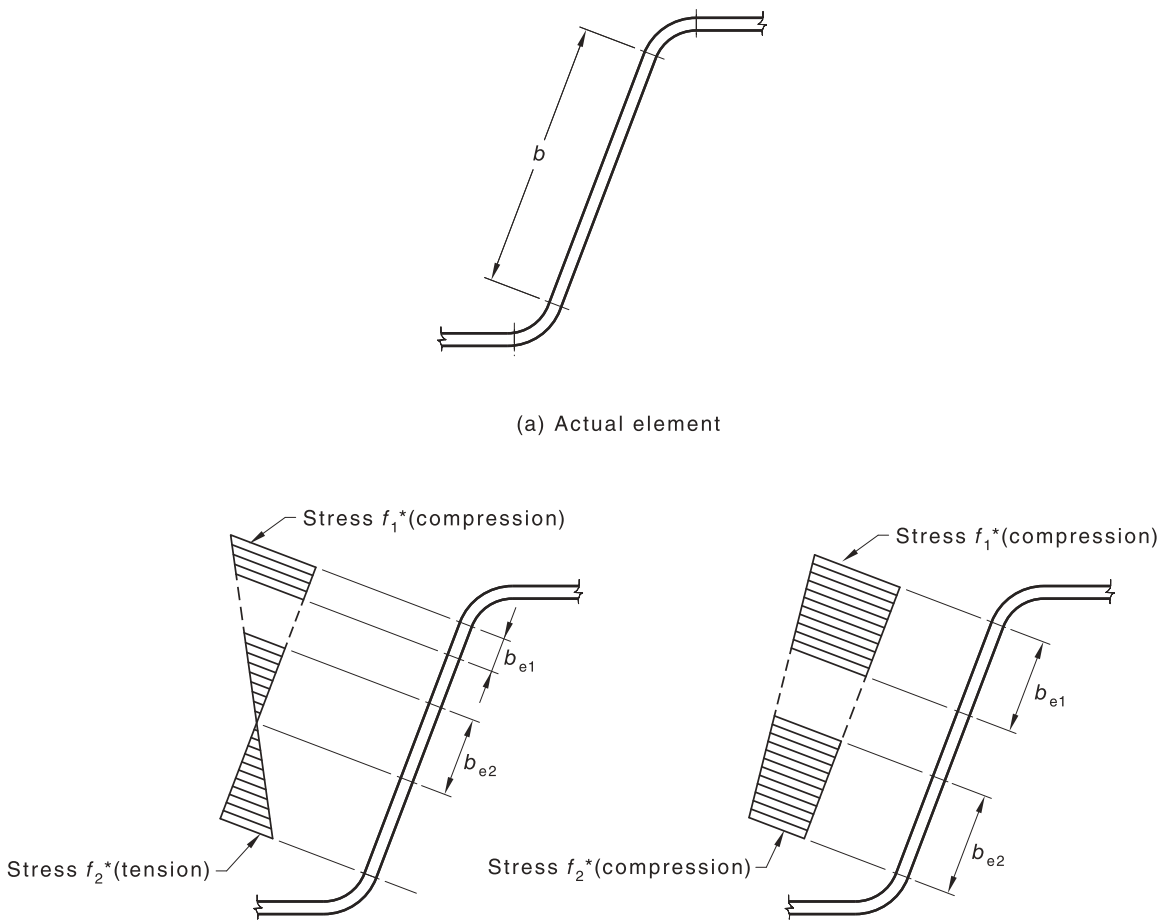

(a) Actual element

(b) Effective element and stress on effective element

FIGURE 2.2.3 STIFFENED ELEMENTS AND WEBS WITH STRESS GRADIENT

2.2.4 Channel-section webs with holes and with stress gradient

2.2.4.1 *General*

The calculation of capacity and deflection for channel-section webs with holes and with stress gradient shall be applicable within the following limits:

(a) $d_{wh}/d_1 < 0.7$ . . . 2.2.4.1

where

d_{wh} = depth of the web hole

d_1 = depth of the flat portion of the web measured along the plane of the web

(b) $d_1/t \leq 200$.

(c) Holes centred at mid-depth of the web.

(d) Clear distance between holes is greater than or equal to 450 mm.

(e) Non-circular holes corner radii greater than or equal to $2t$.

(f) Non-circular holes with $d_{wh} \leq 65$ mm and $b \leq 115$ mm, where b is the length of the web hole.

(g) Circular hole diameters less than or equal to 150 mm.

(h) $d_{wh} > 15$ mm.

Accessed by UNIVERSITY OF SOUTH AUSTRALIA on 03 May 2019 (Document currency not guaranteed when printed)

COPYRIGHT

2.2.4.2 *Capacity calculations*

When $d_{wh}/d_1 < 0.38$, the effective widths (b_{e1}) and (b_{e2}) shall be determined in accordance with Clause 2.2.3.2 by assuming no hole exists in the web.

When $d_{wh}/d_1 \geq 0.38$, the effective width shall be determined in accordance with Clause 2.3.1 assuming the compression portion of the web consists of an unstiffened element adjacent to the hole with $f^* = f_1$ as shown in Figure 2.3.2.

2.2.4.3 *Deflection calculations*

The effective widths shall be determined in accordance with Clause 2.2.3 by assuming no hole exists in the web.

2.2.5 Uniformly compressed elements restrained by intermittent connections

2.2.5.1 *General*

The provisions of this Clause shall apply to uniformly compressed elements of flexural members only. The provisions shall be limited to multiple flute built-up members having edge-stiffened cover plates. When the spacing of fasteners, s, of a uniformly compressed element restrained by intermittent connections is not greater than the limits specified in Clause 4.1.3, the effective width shall be calculated in accordance with Clause 2.2.1. When the spacing of fasteners is greater than the limits specified in Clause 4.1.3, the effective width shall be determined in accordance with Clauses 2.2.5.2 and 2.2.5.3 below.

2.2.5.2 *Capacity calculations*

The effective width of the uniformly compressed element restrained by intermittent connections shall be determined as follows:

(a) When $f < f_c$, the effective width of the compression element between connection lines shall be calculated in accordance with Clause 2.2.1.2.

(b) When $f \geq f_c$, the effective width of the compression element between connection lines shall be calculated in accordance with Clause 2.2.1.2, except that a reduction factor ρ shall be determined as follows:

$$\rho = \rho_t \rho_m \leq \frac{\left(1 - \frac{0.22}{\lambda}\right)}{\lambda} \qquad \text{. . . 2.2.5.2(1)}$$

where

$$\rho_t = \frac{\left(1 - \frac{0.22}{\lambda_t}\right)}{\lambda_t} \leq 1.0 \qquad \text{. . . 2.2.5.2(2)}$$

$$\lambda_t = \sqrt{\frac{f_c}{f_{cr}}} \qquad \text{. . . 2.2.5.2(3)}$$

f_c = critical column buckling stress of compression element

$$= 3.29\, E/(s/t)^2 \qquad \text{. . . 2.2.5.2(4)}$$

s = centre to centre spacing of connectors in the line of compression stress (see Figure 2.2.5)

t = thickness of cover plate in compression

f_{cr} = critical buckling stress defined by Equation 2.2.1.2(5), where b is the transverse spacing of connectors

Accessed by UNIVERSITY OF SOUTH AUSTRALIA on 03 May 2019 (Document currency not guaranteed when printed)

COPYRIGHT

$$\rho_m = 8\frac{f_y}{f}\sqrt{\frac{tf_c}{df}} \leq 1.0 \qquad \text{. . . 2.2.5.2(5)}$$

d = overall depth of built up member

f = stress in compression element restrained by intermittent connections when the controlling extreme fibre stress is f_y

The provisions of this Section shall apply to shapes that meet the following limits:

(i) 38 mm ≤ d ≤ 190 mm.

(ii) 0.9 mm ≤ t ≤ 1.5 mm.

(iii) 50 mm ≤ s ≤ 200 mm.

(iv) 228 MPa ≤ f_y ≤ 414 MPa.

(v) 100 ≤ b/t ≤ 350.

The effective width of the edge stiffener and the flat portion, e, shall be determined in accordance with Clause 2.4.2 with modifications as follows:

(A) For $f < f_c$

$$b = e \qquad \text{. . . 2.2.5.2(6)}$$

(B) For $f \geq f_c$

For the flat portion, e, the effective width, b_e, in Equations 2.4.2(5) and 2.4.2(6) shall be calculated in accordance with Clause 2.2.1.2 with—

(1) b taken as e;

(2) if $d_l/e \leq 0.8$, k is determined in accordance with Table 2.4.2, if $d_l/e > 0.8$, $k = 1.25$; and

(3) ρ calculated using Equation 2.2.5.2(1) in lieu of Equation 2.2.1.2(3),

where

b = flat width of element measured between longitudinal connection lines and exclusive of radii at stiffeners

e = flat width between the first line of connector and the edge stiffener. See Figure 2.2.5

d_l = overall length of stiffener as defined in Clause 2.4

For the edge stiffener, d_s and I_a shall be determined using b' and f' in lieu of b and f respectively.

$$b' = 2e + \text{minimum of } 0.75s \text{ and } b_1 \qquad \text{. . . 2.2.5.2(7)}$$

$$f' = \text{maximum of } \rho_m f \text{ and } f_c \qquad \text{. . . 2.2.5.2(8)}$$

where

f' = stress used in 2.4.2 for determining effective width of edge stiffener

f_c = buckling stress of cover plate determined in accordance with Equation 2.2.5.2(4)

b' = equivalent flat width for determining the effective width of the edge stiffener

b_1 = transverse spacing between the first and the second line of fasteners in the compression element (see Figure 2.2.5).

Accessed by UNIVERSITY OF SOUTH AUSTRALIA on 03 May 2019 (Document currency not guaranteed when printed)

COPYRIGHT

The provisions of this Clause (2.2.5) shall not apply to single flute members having compression plates with edge stiffeners.

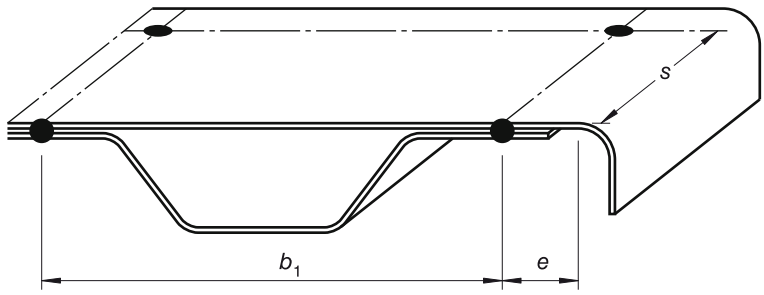

FIGURE 2.2.5 DIMENSION ILLUSTRATION OF CELLULAR DECK

2.2.5.3 *Deflection calculations*

The effective width of the uniformly compressed element restrained by intermittent connections used for computing deflection shall be determined in accordance with Clause 2.2.5.2 except that—

(a) f_d shall be substituted for f, where f_d is the computed compression stress in the element being considered at service load; and

(b) the maximum extreme fibre stress in the built-up member shall be substituted for f_y.

2.3 EFFECTIVE WIDTHS OF UNSTIFFENED ELEMENTS

2.3.1 Uniformly compressed unstiffened elements

2.3.1.1 *General*

For uniformly compressed unstiffened elements (see Figure 2.3.1), the effective widths for section or member capacity and deflection calculations shall be determined in accordance with Clauses 2.3.1.2 and 2.3.1.3, respectively.

2.3.1.2 *Effective width for capacity calculations*

For determining the section or member capacity, the effective widths (b_e) of uniformly compressed unstiffened elements shall be determined in accordance with Clause 2.2.1.2 with the exception that k shall be taken as 0.43 and b shall be as shown in Figure 2.3.1.

2.3.1.3 *Effective width for deflection calculations*

For determining the deflection, the effective widths (b_e) shall be determined in accordance with Procedure I of Clause 2.2.1.3 except that f_d^* is substituted for f^* and $k = 0.43$.

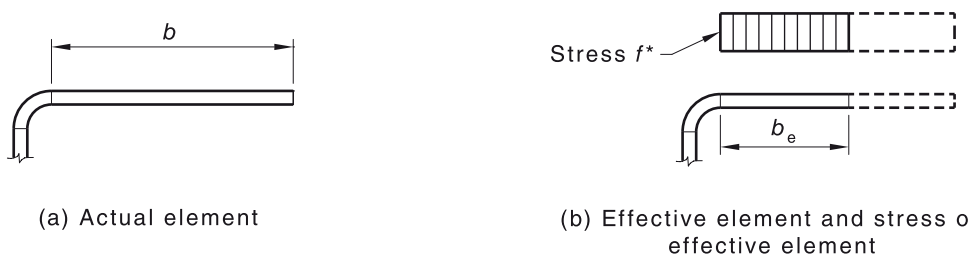

FIGURE 2.3.1 UNSTIFFENED ELEMENT WITH UNIFORM COMPRESSION

Accessed by UNIVERSITY OF SOUTH AUSTRALIA on 03 May 2019 (Document currency not guaranteed when printed)

COPYRIGHT

2.3.2 Unstiffened elements and edge stiffeners with stress gradient

2.3.2.1 *General*

For unstiffened elements and edge stiffeners with stress gradient, the effective widths for section or member capacity and deflection calculations shall be determined in accordance with Clauses 2.3.2.2 and 2.3.2.3, respectively.

2.3.2.2 *Effective width for capacity calculations*

For determining the section or member capacity, the effective widths (b_e) measured from the supported edge of unstiffened compression elements and edge stiffeners with stress gradient shall be determined in accordance with Clause 2.2.1.2, with $f^* = f_1^*$ and with k and ρ determined in accordance with this Clause.

f_1^*, f_2^* = stresses shown in Figures 2.3.2(A) and 2.3.2(B) calculated on the basis of the gross section where f_1^* is compression (+) and f_2^* may be either tension (−) or compression (+). In the case where f_1^* and f_2^* are both in compression $f_1^* \geq f_2^*$

ψ = stress ratio

$$= f_2^* / f_1^* \qquad \text{. . . 2.3.2.2(1)}$$

The effective width factor (ρ) and the plate buckling coefficient (k) shall be determined as follows:

(a) For unstiffened elements with stress gradient causing compression at both longitudinal edges of the unstiffened element $\left(f_1^* \text{ and } f_2^*\right)$ both in compression, as shown in Figure 2.3.2(A).

ρ shall be determined using Equation 2.2.1.2(3) and λ shall be determined using Equation 2.2.1.2(4). The buckling coefficient (k) in Equation 2.2.1.2(5) shall be determined as follows:

(i) Where the stress decreases toward the unstiffened edge of the element as shown in Figure 2.3.2(A)(i), k shall be calculated as follows:

$$k = \frac{0.578}{\psi + 0.344} \qquad \text{. . . 2.3.2.2(2)}$$

(ii) Where the stress increases toward the unstiffened edge of the element as shown in Figure 2.3.2(A)(ii), k shall be calculated as follows:

$$k = 0.57 - 0.21\psi + 0.07\psi^2 \qquad \text{. . . 2.3.2.2(3)}$$

(b) For unstiffened elements with stress gradient causing compression at one longitudinal edge and tension at the other longitudinal edge of the unstiffened element:

(i) For f_1^* in compression at the unsupported edge and f_2^* in tension as shown in Figure 2.3.2(B)(i), ρ shall be calculated as follows:

$$\rho = 1 \qquad \text{for } \lambda \leq 0.673(1 - \psi)$$

$$\rho = \left(1 - \psi\right)\frac{1 - \dfrac{0.22\left(1 - \psi\right)}{\lambda}}{\lambda} \qquad \text{for } \lambda > 0.673(1 - \psi) \qquad \text{. . . 2.3.2.2(4)}$$

λ shall be determined using Equation 2.2.1.2(4).

$$k = 0.57 - 0.21\psi + 0.07\psi^2 \qquad \text{. . . 2.3.2.2(5)}$$

Accessed by UNIVERSITY OF SOUTH AUSTRALIA on 03 May 2019 (Document currency not guaranteed when printed)

COPYRIGHT

(ii) For f_1^* in compression at the supported edge and f_2^* in tension as shown in Figure 2.3.2(B)(ii), ρ shall be calculated as follows:

For $-1 < \psi < 0$: $\rho = 1$ for $\lambda \leq 0.673$

$$\rho = (1+\psi)\frac{\left(1-\frac{0.22}{\lambda}\right)}{\lambda} - \psi \quad \text{for } \lambda > 0.673 \qquad \ldots 2.3.2.2(6)$$

λ shall be determined using Equation 2.2.1.2(4).

$$k = 1.70 - 5\psi + 17.1\psi^2 \qquad \ldots 2.3.2.2(7)$$

For $\psi \leq -1$: $\rho = 1$

Alternatively, the plate buckling coefficient (k) in Equation 2.3.2.2(5) may be determined using Equation 2.3.2.2(8) for plain channels bent in the plane of symmetry with the unsupported edge of the unstiffened element in compression as follows:

$$k = 0.1451(b_2/b_1) + 1.256 \qquad \ldots 2.3.2.2(8)$$

where

b_2 = width of the unstiffened element

b_1 = width of the stiffened element

For other types of sections, k in Equations 2.3.2.2(2), 2.3.2.2(3), 2.3.2.2(5) and 2.3.2.2(7) for the unstiffened element and k for each remaining flat element of the section may be determined from a rational elastic buckling analysis of the whole section as a plate assemblage subjected to the longitudinal stress distribution in the section prior to buckling.

In calculating the effective section modulus (Z_e) in Clause 3.3.2.2 or in Clause 3.3.3.2, the extreme compression fibre in Figures 2.3.2(A)(ii) and 2.3.2(B)(i) is taken as the edge of the effective section (closer to the unsupported edge).

In calculating the effective section modulus (Z_e) in Clause 3.3.2.2, the extreme tension fibre in Figure 2.3.2(B)(ii) is taken as the edge of the effective section (closer to the unsupported edge).

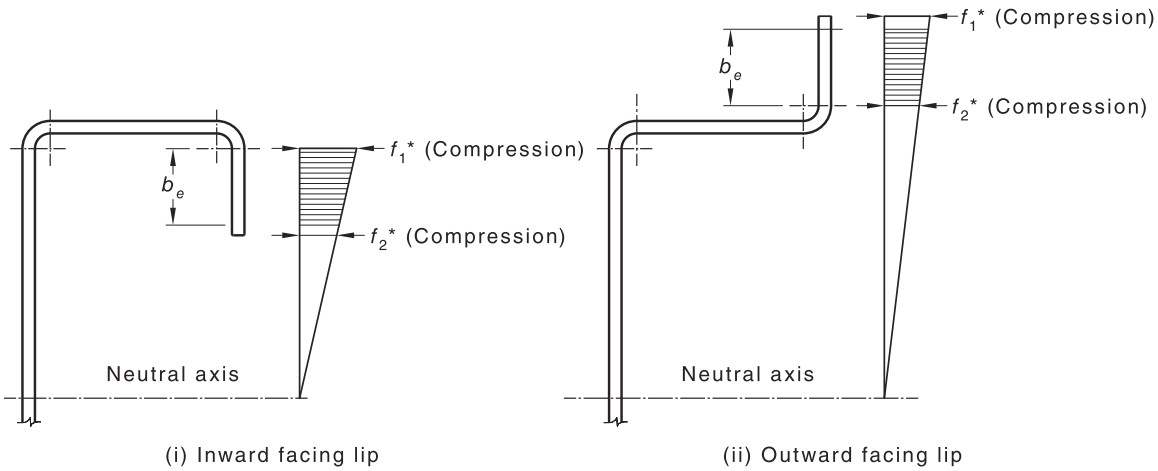

FIGURE 2.3.2(A) UNSTIFFENED ELEMENTS WITH STRESS GRADIENT—BOTH EDGES IN COMPRESSION

Accessed by UNIVERSITY OF SOUTH AUSTRALIA on 03 May 2019 (Document currency not guaranteed when printed)

COPYRIGHT

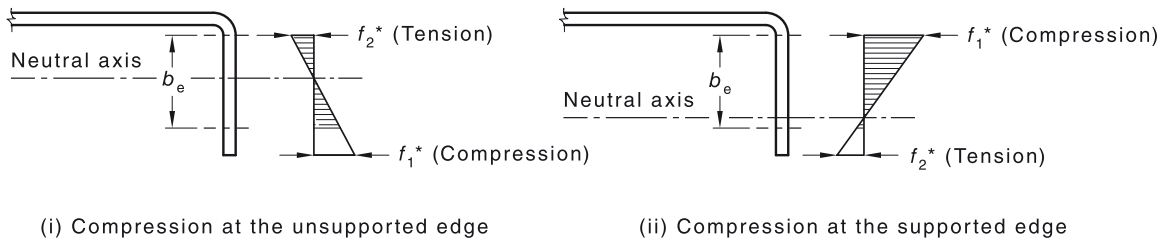

FIGURE 2.3.2(B) UNSTIFFENED ELEMENTS WITH STRESS GRADIENT—ONE EDGE IN COMPRESSION AND ONE EDGE IN TENSION

2.3.2.3 *Effective width for deflection calculations*

For determining the deflection, the effective widths (b_e) of unstiffened elements and edge stiffeners with stress gradient shall be determined in accordance with Clause 2.3.2.2 except that f_{d1}^* and f_{d2}^* are substituted for f_1^* and f_2^*. The calculated stresses f_1^* and f_2^* (see Figures 2.3.2(A) and 2.3.2(B)) shall be used to determine f_{d1}^* and f_{d2}^* respectively. Calculations shall be based on the effective section for the load for which deflections are determined.

2.4 EFFECTIVE WIDTHS OF UNIFORMLY COMPRESSED ELEMENTS WITH AN EDGE STIFFENER

2.4.1 General

For uniformly compressed elements with an edge stiffener, the effective widths for section or member capacity and deflection calculations shall be determined in accordance with Clauses 2.4.2 and 2.4.3 respectively.

2.4.2 Effective width for capacity calculations

For determining the section or member capacity, the effective widths (b_e) of uniformly compressed elements with an edge stiffener shall be determined as follows:

(a) $\dfrac{b}{t} \le 0.328S$

I_a = 0 (no edge stiffener is required)

= adequate second moment of area of the stiffener, so that each component element behaves as a stiffened element

$b_e = b$ . . . 2.4.2(1)

$b_1 = b_2 = b/2$ (see Figure 2.4.2) . . . 2.4.2(2)

$d_s = d_{se}$ (for simple lip stiffener) . . . 2.4.2(3)

$A_s = A_{se}$ (for other stiffener shapes) . . . 2.4.2(4)

(b) $\dfrac{b}{t} > 0.328S$

$b_1 = \dfrac{b_e}{2}\left(\dfrac{I_s}{I_a}\right)$ (see Figure 2.4.2) . . . 2.4.2(5)

$b_2 = b_e - b_1$ (see Figure 2.4.2) . . . 2.4.2(6)

$d_s = d_{se}\left(\dfrac{I_s}{I_a}\right)$ (for simple lip stiffener) . . . 2.4.2(7)

Accessed by UNIVERSITY OF SOUTH AUSTRALIA on 03 May 2019 (Document currency not guaranteed when printed)

COPYRIGHT

$$A_s = A_{se}\left(\frac{I_s}{I_a}\right) \quad \text{(for other stiffener shapes)} \qquad \ldots 2.4.2(8)$$

$$A_{se} = d_{se}\, t \quad \text{(for stiffener shown in Figure 2.4.2)} \qquad \ldots 2.4.2(9)$$

$$I_s = \frac{d^3 t \sin^2\theta}{12} \quad \text{(for stiffener shown in Figure 2.4.2)} \qquad \ldots 2.4.2(10)$$

$$I_a = 399t^4\left[\frac{\left(\frac{b}{t}\right)}{S} - 0.328\right]^3 \le t^4\left[115\frac{\left(\frac{b}{t}\right)}{S} + 5\right] \qquad \ldots 2.4.2(11)$$

If I_s is greater than or equal to I_a, then I_s is equal to I_a in Equations 2.4.2(5), 2.4.2(7), 2.4.2(8) and Table 2.4.2.

$$n = \left[0.582 - \frac{\left(\frac{b}{t}\right)}{4S}\right] \ge \frac{1}{3} \qquad \ldots 2.4.2(12)$$

S = slenderness factor

$$= 1.28\sqrt{\frac{E}{f^*}} \qquad \ldots 2.4.2(13)$$

f^* = stress (see Figure 2.4.2(b))

b_e shall be calculated in accordance with Clause 2.2.1.2, where k shall be as given in Table 2.4.2.

TABLE 2.4.2

DETERMINATION OF PLATE BUCKLING COEFFICIENT (k)

Plate buckling coefficient (k)		
Simple lip edge stiffener ($140° \ge \theta \ge 40°$)		Other edge stiffener shapes
$d_l/b \le 0.25$	$0.25 < d_l/b \le 0.8$	
$3.57\left(\frac{I_s}{I_a}\right)^n + 0.43 \le 4$	$\left(4.82 - \frac{5d_l}{b}\right)\left(\frac{I_s}{I_a}\right)^n + 0.43 \le 4$	$3.57\left(\frac{I_s}{I_a}\right)^n + 0.43 \le 4$

Accessed by UNIVERSITY OF SOUTH AUSTRALIA on 03 May 2019 (Document currency not guaranteed when printed)

COPYRIGHT

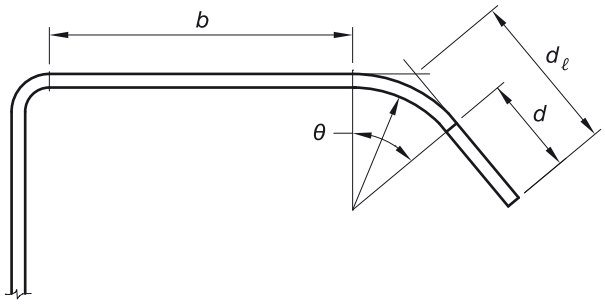

where
d_ℓ, d = actual stiffener dimensions

(a) Actual and effective stiffener

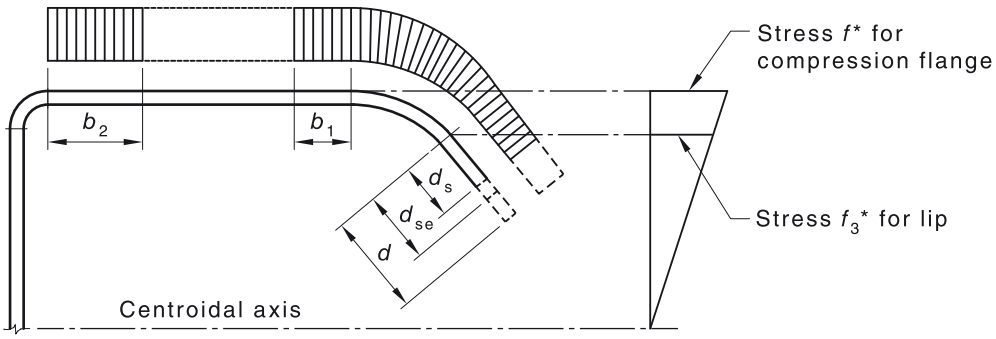

where
d_{se} = effective width of the stiffener calculated in accordance with Clause 2.3.2.2
d_s = reduced effective width of stiffener

(b) Effective element and stress on effective element

FIGURE 2.4.2 ELEMENTS WITH SIMPLE-LIP EDGE STIFFENER

2.4.3 Effective width for deflection calculations

For determining the deflection, the effective widths (b_e) shall be determined in accordance with Clause 2.4.2, except that f_d^* is substituted for f^*.

2.5 EFFECTIVE WIDTHS OF UNIFORMLY COMPRESSED STIFFENED ELEMENTS WITH ONE INTERMEDIATE STIFFENER

2.5.1 General

For uniformly compressed elements with an intermediate stiffener (see Figure 2.5.2), the effective widths for section or member capacity and deflection calculations shall be determined in accordance with Clauses 2.5.2 and 2.5.3 respectively.

2.5.2 Effective width for capacity calculations

For determining the section or member capacity, the effective widths (b_e) of uniformly compressed elements with one intermediate stiffener shall be determined as follows:

Accessed by UNIVERSITY OF SOUTH AUSTRALIA on 03 May 2019 (Document currency not guaranteed when printed)

COPYRIGHT

(a) $\frac{b_2}{t} \leq S$

I_a = 0 (no intermediate stiffener is required)

= adequate second moment of area of the stiffener, so that each component element behaves as a stiffened element

$b_e = b$ . . . 2.5.2(1)

b = flat width of element excluding corners or bends (see Figure 2.5.2)

A_s = reduced area of the stiffener

$= A_{se}$ . . . 2.5.2(2)

A_{se} = effective area of the stiffener

A_s shall be used in calculating the overall effective section properties. The centroid of the stiffener shall be considered located at the centroid of the full area of the stiffener, and the second moment of area of the stiffener about its own centroidal axis shall be that of the full section of the stiffener.

(b) $\frac{b_2}{t} > S$

$$A_s = A_{se}\left(\frac{I_s}{I_a}\right) \quad \text{. . . 2.5.2(3)}$$

n = exponent

$$= \left[0.583 - \frac{(b_2/t)}{12S}\right] \geq \frac{1}{3} \quad \text{. . . 2.5.2(4)}$$

k = plate buckling coefficient

$$= 3\left(\frac{I_s}{I_a}\right)^n + 1 \quad \text{. . . 2.5.2(5)}$$

$$I_a = t^4\left[50\frac{\left(\frac{b_2}{t}\right)}{S} - 50\right] \quad \text{for } S < \frac{b_2}{t} < 3S \quad \text{. . . 2.5.2(6)}$$

$$I_a = t^4\left[\frac{128\left(\frac{b_2}{t}\right)}{S} - 285\right] \quad \text{for } \frac{b_2}{t} \geq 3S \quad \text{. . . 2.5.2(7)}$$

where

b_2 = flat width of element with intermediate stiffener excluding radii (see Figure 2.5.2(a))

I_s = second moment of area of the full stiffener about its own centroidal axis parallel to the element to be stiffened

S = slenderness factor

$$= 1.28\sqrt{\frac{E}{f^*}} \quad \text{. . . 2.5.2(8)}$$

Accessed by UNIVERSITY OF SOUTH AUSTRALIA on 03 May 2019 (Document currency not guaranteed when printed)

COPYRIGHT

If I_s is greater than or equal to I_a, then $I_s = I_a$ in Equations 2.5.2(3) and 2.5.2(5).

The effective width b_e shall be calculated in accordance with Clause 2.2.1.2, where k shall be as specified in this Clause.

The value of d_s, calculated in accordance with Clause 2.5.2, shall be used in calculating the overall effective section properties.

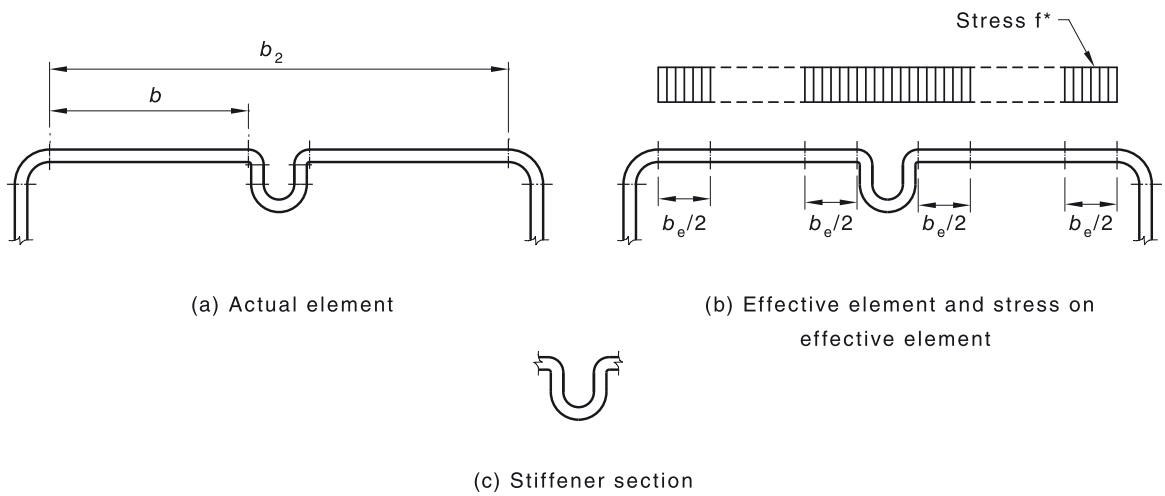

FIGURE 2.5.2 ELEMENTS WITH ONE INTERMEDIATE STIFFENER

2.5.3 Effective width for deflection calculations

For determining the deflection, the effective widths (b_e) shall be determined in accordance with Clause 2.5.2, except that f_d^* is substituted for f^*.

2.6 EFFECTIVE WIDTHS OF UNIFORMLY COMPRESSED STIFFENED ELEMENTS WITH MULTIPLE INTERMEDIATE STIFFENER

2.6.1 Determination of effective width

The effective width of the element shall be determined as follows:

$$b_e = \rho\left(\frac{A_g}{t}\right) \qquad \text{. . . 2.6.1(1)}$$

where

b_e = effective width of the element, located at the end of the element including stiffeners [see Figure 2.6(A)]

ρ = effective width factor

$$= 1 \qquad \text{if } \lambda \le 0.673$$

$$= \frac{\left(1 - \frac{0.22}{\lambda}\right)}{\lambda} \qquad \text{if } \lambda > 0.673 \qquad \text{. . . 2.6.1(2)}$$

$$\lambda = \frac{1.052}{\sqrt{k}}\left(\frac{b_o}{t}\right)\sqrt{\frac{f^*}{E}} \qquad \text{. . . 2.6.1(3)}$$

b_o = total flat width of the stiffened element [see Figure 2.6(B)]

Accessed by UNIVERSITY OF SOUTH AUSTRALIA on 03 May 2019 (Document currency not guaranteed when printed)

COPYRIGHT

A_g = gross area of the element including stiffeners

t = thickness of element

The plate buckling coefficient (k) shall be determined from the minimum of Rk_d and k_{loc}, determined in accordance with Clause 2.6.2 or Clause 2.6.3 as appropriate, where—

R = modification factor for the distortional plate buckling coefficient

$$= 2 \qquad \text{if } \frac{b_o}{d_1} < 1$$

$$= \frac{11 - \left(\frac{b_o}{d_1}\right)}{5} \geq \frac{1}{2} \qquad \text{if } \frac{b_o}{d_1} \geq 1 \qquad \ldots 2.6.1(4)$$

k_d = plate buckling coefficient for distortional buckling calculated using Equation 2.6.2.1(2)

k_{loc} = plate buckling coefficient for local sub-element buckling calculated using Equation 2.6.2.1(1)

d_1 = width of elements adjoining the stiffened element, e.g. the depth of the web in a hat section with multiple intermediate stiffeners in the compression flange is equal to d_1; if the adjoining elements have different widths, use the smallest one

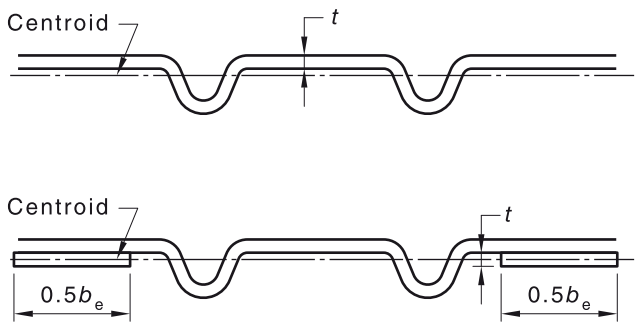

FIGURE 2.6(A) EFFECTIVE WIDTH LOCATIONS

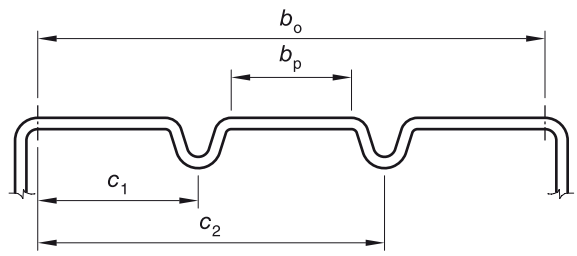

FIGURE 2.6(B) PLATE WIDTHS AND STIFFENER LOCATIONS

Accessed by UNIVERSITY OF SOUTH AUSTRALIA on 03 May 2019 (Document currency not guaranteed when printed)

COPYRIGHT

2.6.2 Specific case: '*n*' identical stiffeners, equally spaced

2.6.2.1 *Capacity calculation*

$$k_{loc} = 4(n+1)^2 \quad \text{. . . 2.6.2.1(1)}$$

$$k_d = \frac{\left(1+\beta^2\right)^2 + \gamma\left(1+n\right)}{\beta^2\left[1+\delta\left(n+1\right)\right]} \quad \text{. . . 2.6.2.1(2)}$$

$$\beta = \left[1+\gamma\left(n+1\right)\right]^{\frac{1}{4}} \quad \text{. . . 2.6.2.1(3)}$$

$$\gamma = \frac{10.92 I_{sp}}{b_o t^3} \quad \text{. . . 2.6.2.1(4)}$$

$$\delta = \frac{A_s}{b_o t} \quad \text{. . . 2.6.2.1(5)}$$

where

β = coefficient

γ = importance factor

δ = coefficient

I_{sp} = second moment of area of a stiffener about the centre-line of the flat portion of the element. The radii which connect the stiffener to the flat may be included

b_o = total flat width of the stiffened element (see Figure 2.6(B))

A_s = gross area of the stiffener

If $l_{br} < \beta b_a$, then l_{br}/b_o shall be permitted to be substituted for β to account for increased capacity due to bracing, where l_{br} is the unsupported length of bracing or other restraint that restricts distortional buckling of the element.

2.6.2.2 *Deflection calculation*

The effective width (b_e) used in calculating deflection shall be determined in accordance with Clause 2.6.2.1, except that f_d^* shall be substituted for f^*, where f_d^* is the design compressive stress in the element being considered based on the effective section at the load for which deflections are determined.

2.6.3 General case: Arbitrary stiffener size, location and number

2.6.3.1 *Capacity calculation*

$$k_{loc} = 4\left(\frac{b_o}{b_p}\right)^2 \quad \text{. . . 2.6.3.1(1)}$$

$$k_d = \frac{\left(1+\beta^2\right)^2 + 2\sum_{i=1}^{n}\gamma_i\omega_i}{\beta^2\left(1+2\sum_{i=1}^{n}\delta_i\omega_i\right)} \quad \text{. . . 2.6.3.1(2)}$$

$$\beta = \left(2\sum_{i=1}^{n}\gamma_i\omega_i + 1\right)^{\frac{1}{4}} \quad \text{. . . 2.6.3.1(3)}$$

Accessed by UNIVERSITY OF SOUTH AUSTRALIA on 03 May 2019 (Document currency not guaranteed when printed)

COPYRIGHT

$$\gamma_i = \frac{10.92\left(I_{sp}\right)_i}{b_o t^3} \quad \text{. . . 2.6.3.1(4)}$$

$$\omega_i = \sin^2\left(\pi \frac{c_i}{b_o}\right) \quad \text{. . . 2.6.3.1(5)}$$

$$\delta_i = \frac{\left(A_s\right)_i}{b_o t} \quad \text{. . . 2.6.3.1(6)}$$

where

b_p = greatest sub-element flat width [see Figure 2.6(B)]

ω_i = coefficient

c_i = horizontal distance from the edge of the element to the centre-line(s) of the stiffener(s) (see Figure 2.6(B))

i = index for stiffener 'i'

If $l_{br} < \beta b_o$, then l_{br}/b_o shall be permitted to be substituted for β to account for increased capacity due to bracing.

2.6.3.2 *Deflection calculation*

The effective width (b_e) used in calculating deflection shall be determined in accordance with Clause 2.6.3.1, except that f_d^* shall be substituted for f^*, where f_d^* is the design compressive stress in the element being considered based on the effective section at the load for which deflections are determined.

2.7 EFFECTIVE WIDTHS OF UNIFORMLY COMPRESSED EDGE-STIFFENED ELEMENTS WITH INTERMEDIATE STIFFENERS

The effective width (b_e) of uniformly compressed edge-stiffened elements with intermediate stiffeners shall be determined as follows:

(a) If $b_2/t \leq S/3$, the element is fully effective and no local buckling reductions are required.

(b) If $b_2/t > S/3$, the plate buckling coefficient (k) shall be determined in accordance with this Clause but with b_2 replacing b in all expressions,

where

b_2 = total flat width of the edge-stiffened element (see Figure 2.5.2)

S = slenderness factor

If k, calculated in accordance with Clause 2.4.2, is less than 4 ($k < 4$), the intermediate stiffeners shall be ignored and the provisions of Clause 2.4.2 shall be followed for the calculation of b_e.

If k, calculated in accordance with Clause 2.4.2, is equal to 4 ($k = 4$), b_e of the edge-stiffened element shall be calculated in accordance with Clause 2.6, where the modification factor for the distortional plate buckling coefficient shall be less than or equal to 1.

Accessed by UNIVERSITY OF SOUTH AUSTRALIA on 03 May 2019 (Document currency not guaranteed when printed)

COPYRIGHT

2.8 ARCHED COMPRESSION ELEMENTS

A circular or parabolic arch-shaped compression element, stiffened at both ends, shall be considered self-stiffened and fully effective if the second moment of area of the arch about its own centroidal axis parallel to the base is not less than the minimum second moment of area ($I_{\text{min.}}$) specified in Clause 2.5. For the purpose of this Clause, b shall be taken as half the length of arch and the ratio b/t shall not exceed 60. For other conditions, the geometrical properties of sections shall be determined by load tests in accordance with Section 8.

Accessed by UNIVERSITY OF SOUTH AUSTRALIA on 03 May 2019 (Document currency not guaranteed when printed)

COPYRIGHT

SECTION 3 MEMBERS

3.1 GENERAL

Section properties used for the determination of structural performance, moment capacity of beams or capacity of axial members in compression shall be those calculated in accordance with Section 2.

Both full and effective section properties, where applicable, shall be required. Full section properties shall be used for the determination of buckling moments or stresses. Effective section properties shall be used for the determination of section and member capacities.

3.2 MEMBERS SUBJECT TO AXIAL TENSION

3.2.1 Design for axial tension

A member subject to a design axial tensile force $\left(N^*\right)$ shall satisfy—

$$N^* \leq \phi_t N_t \qquad \text{. . . 3.2.1}$$

where

ϕ_t = capacity reduction factor for members in tension (see Table 1.6.3)

N_t = nominal section capacity of the member in tension determined in accordance with Clause 3.2.2

3.2.2 Nominal section capacity

The nominal section capacity of a member in tension shall be taken as the lesser of—

$$N_t = A_g f_y \text{; and} \qquad \text{. . . 3.2.2(1)}$$

$$N_t = 0.85 k_t A_n f_u \qquad \text{. . . 3.2.2(2)}$$

where

A_g = gross area of the cross-section

f_y = yield stress used in design

k_t = correction factor for distribution of forces determined in accordance with Clause 3.2.3.2

A_n = net area of the cross-section, obtained by deducting from the gross area of the cross-section, the sectional area of all penetrations and holes, including fastener holes

f_u = tensile strength used in design

3.2.3 Distribution of forces

3.2.3.1 *End connections providing uniform force distribution*

Where for design purposes it is assumed that the tensile force is distributed uniformly to a tension member, the end connections shall satisfy both the following:

(a) The connections shall be made to each part of the member and shall be symmetrically placed about the centroidal axis of the member.

(b) Each part of the connection shall be proportioned to transmit at least the maximum design force carried by the connected part of the member.

For connections satisfying these requirements, the value of k_t shall be taken as 1.0.

Accessed by UNIVERSITY OF SOUTH AUSTRALIA on 03 May 2019 (Document currency not guaranteed when printed)

COPYRIGHT

3.2.3.2 *End connections providing non-uniform force distribution*

If the end connections of a tension member do not conform to Clause 3.2.3.1, then the member shall be designed to conform to Clause 3.5 using $k_t = 1.0$, except that Clause 3.2.2 may be used for the following members:

(a) *Eccentrically connected angles and channels* Eccentrically connected angles and channels may be designed in accordance with Clause 3.2.2, using the appropriate value of k_t given in Table 3.2.

(b) *Channels connected by both flanges only* A symmetrical rolled or built-up member of channel-section connected by both flanges only may be designed in accordance with Clause 3.2.2 using a value of k_t equal to 0.85, provided—

(i) the length between the first and last rows of fasteners in the connection, or when the member is welded, the length of longitudinal weld provided to each side of the connected flanges is not less than the depth of the member; and

(ii) each flange connection is proportioned to transmit at least half of the maximum design force carried by the connected member.

TABLE 3.2

CORRECTION FACTOR (k_t) FOR SHADED ELEMENT

Configuration case	Correction factor (k_t)
(i)	0.75 for unequal angles connected by the short leg 0.85 otherwise
(ii) 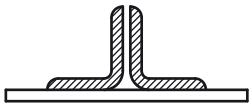	As for case (i)
(iii) 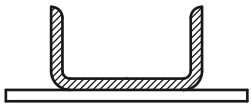	0.85
(iv) 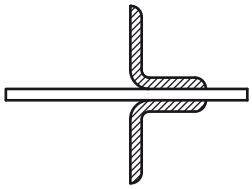	1.0
(v) 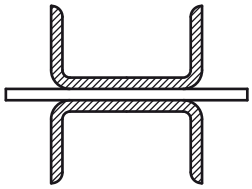	1.0

Accessed by UNIVERSITY OF SOUTH AUSTRALIA on 03 May 2019 (Document currency not guaranteed when printed)

COPYRIGHT

3.3 MEMBERS SUBJECT TO BENDING

3.3.1 Bending moment

The design bending moment $\left(M^*\right)$ of a flexural member shall satisfy the following:

(a) $M^* \leq \phi_b M_s$ . . . 3.3.1(1)

(b) $M^* \leq \phi_b M_b$ . . . 3.3.1(2)

where

ϕ_b = capacity reduction factor for bending (see Table 1.6.3)

M_s = nominal section moment capacity calculated in accordance with Clause 3.3.2

M_b = nominal member moment capacity calculated in accordance with Clause 3.3.3

3.3.2 Nominal section moment capacity

3.3.2.1 *General*

The nominal section moment capacity (M_s) shall be calculated either on the basis of initiation of yielding in the effective section specified in Clause 3.3.2.2 or on the basis of the inelastic reserve capacity specified in Clause 3.3.2.3.

3.3.2.2 *Based on initiation of yielding*

The nominal section moment capacity (M_s) shall be determined as follows:

$$M_s = Z_e f_y \quad \text{. . . 3.3.2.2}$$

where Z_e is the effective section modulus calculated with the extreme compression or tension fibre at f_y.

3.3.2.3 *Based on inelastic reserve capacity*

The inelastic flexural reserve capacity may be used if the following conditions are met:

(a) The member is not subject to twisting or to lateral, torsional, distortional or flexural-torsional buckling.

(b) The effect of cold-forming is not included in determining the yield stress (f_y).

(c) For Item (i) (below), the ratio of the depth of the compressed portion of the web (d_w) to its thickness (t_w) does not exceed the slenderness ratio (λ_1).

(d) The design shear force (V^*) does not exceed 0.60 f_y times the web area ($d_1 t_w$).

(e) The angle between any web and a perpendicular to the flange does not exceed 30°.

The nominal section moment capacity (M_s) shall not exceed either $1.25 Z_e f_y$, where $Z_e f_y$ shall be determined in accordance with Clause 3.3.2.2 or that causing a maximum compression strain of $C_y e_y$,

where

C_y = compression strain factor

e_y = yield strain

$$= \frac{f_y}{E} \quad \text{. . . 3.3.2.3(1)}$$

E = Young's modulus of elasticity (200×10^3 MPa)

NOTE: There is no limit for the maximum tensile strain.

Accessed by UNIVERSITY OF SOUTH AUSTRALIA on 03 May 2019 (Document currency not guaranteed when printed)

COPYRIGHT

The compression strain factor (C_y) shall be determined as follows:

(i) For stiffened compression elements without intermediate stiffeners:

For $b/t \le \lambda_1$: $C_y = 3$ . . . 3.3.2.3(2)

For $\lambda_1 < b/t < \lambda_2$: $C_y = 3 - 2\left\{\left[\left(\frac{b}{t}\right) - \lambda_1\right] / \left[\lambda_2 - \lambda_1\right]\right\}$ . . . 3.3.2.3(3)

For $b/t \ge \lambda_2$: $C_y = 1$ . . . 3.3.2.3(4)

$$\lambda_1 = \frac{1.11}{\sqrt{\frac{f_y}{E}}} \quad \text{. . . 3.3.2.3(5)}$$

$$\lambda_2 = \frac{1.28}{\sqrt{\frac{f_y}{E}}} \quad \text{. . . 3.3.2.3(6)}$$

(ii) For unstiffened compression elements:

(A) Under stress gradient causing compression at one longitudinal edge and tension at the other longitudinal edge of the unstiffened element.

For $\lambda \le \lambda_3$: $C_y = 3$

For $\lambda_3 < \lambda \le \lambda_4$: $C_y = 3 - 2\left[\frac{(\lambda - \lambda_3)}{(\lambda_4 - \lambda_3)}\right]$ . . . 3.3.2.3(7)

For $\lambda \ge \lambda_4$: $C_y = 1$

$\lambda_3 = 0.43$

$\lambda_4 = 0.673\ (1 - \psi)$ . . . 3.3.2.3(8)

where λ and ψ shall be determined in accordance with Clause 2.3.2.2.

(B) Under stress gradient causing compression at both longitudinal edges of the unstiffened element.

$C_y = 1$

(iii) For multiple-stiffened compression elements and compression elements with edge stiffeners:

$C_y = 1$

If applicable, effective design widths shall be used in calculating section properties. M_s shall be calculated considering equilibrium of stresses, assuming an ideally elastic-plastic stress-strain curve that is the same in tension as in compression, small deformation and that plane sections remain plane during bending. Combined bending and web crippling shall be in accordance with Clause 3.3.7.

3.3.3 Nominal member moment capacity

3.3.3.1 *General*

The nominal member moment capacity (M_b) shall be one of the following:

(a) The lesser of M_s and the values calculated in accordance with Clauses 3.3.3.2 and 3.3.3.3.

(b) Where appropriate, the lesser of M_s and the values calculated in accordance with Clauses 3.3.3.4 and 3.3.3.3.

Accessed by UNIVERSITY OF SOUTH AUSTRALIA on 03 May 2019 (Document currency not guaranteed when printed)

COPYRIGHT

3.3.3.2 *Members subject to lateral buckling*

3.3.3.2.1 *Open section members*

This Clause does not apply to multiple-web deck, U-box and curved or arch members subject to lateral buckling. It does not apply to members whose cross-sections distort laterally, such as those otherwise laterally stable members whose unbraced compression flanges buckle laterally.

For channel- and Z-purlins in which the tension flange is attached to sheeting, see Clause 3.3.3.4.

The nominal member moment capacity (M_b) of the laterally unbraced segments of singly-, doubly- and point-symmetric sections subjected to lateral buckling shall be calculated as follows:

$$M_b = Z_c f_c \qquad \text{. . . 3.3.3.2.1(1)}$$

where

Z_c = effective section modulus calculated at a stress f_c in the extreme compression fibre

$$f_c = \frac{M_c}{Z_f} \qquad \text{. . . 3.3.3.2.1(2)}$$

M_c = critical moment

Z_f = full unreduced section modulus for the extreme compression fibre

The critical moment (M_c) shall be calculated as follows:

For $\lambda_b \leq 0.60$: $$M_c = M_y \qquad \text{. . . 3.3.3.2.1(3)}$$

For $0.60 < \lambda_b < 1.336$: $$M_c = 1.11 M_y \left[1 - \left(\frac{10\lambda_b^2}{36}\right)\right] \qquad \text{. . . 3.3.3.2.1(4)}$$

For $\lambda_b \geq 1.336$: $$M_c = M_y \left(\frac{1}{\lambda_b^2}\right) \qquad \text{. . . 3.3.3.2.1(5)}$$

where

λ_b = non-dimensional slenderness ratio used to determine M_c for members subject to lateral buckling

$$= \sqrt{\frac{M_y}{M_o}} \qquad \text{. . . 3.3.3.2.1(6)}$$

M_y = moment causing initial yield at the extreme compression fibre of the full section

$$= Z_f f_y \qquad \text{. . . 3.3.3.2.1(7)}$$

M_o = elastic buckling moment determined in accordance with a rational elastic buckling analysis or Paragraph D2.1, Appendix D

3.3.3.2.2 *Closed box members*

For closed box members, the nominal member moment capacity (M_b) shall be determined as follows:

(a) If the unbraced length of the member is less than or equal to l_u, M_b shall be determined in accordance with Clause 3.3.3.2.1,

Accessed by UNIVERSITY OF SOUTH AUSTRALIA on 03 May 2019 (Document currency not guaranteed when printed)

COPYRIGHT

where

l_u = limit of unbraced length by which lateral-torsional buckling is not considered

$$= \frac{0.36C_b\pi}{f_y Z_f}\sqrt{EGJI_y} \qquad \text{. . . 3.3.3.2.2(1)}$$

(b) If the laterally unbraced length of a member is greater than l_u, M_b shall be determined in accordance with Clause 3.3.3.2.1, where the elastic buckling moment (M_o) shall be calculated as follows:

$$M_o = \frac{C_b\pi}{l}\sqrt{EGJI_y} \qquad \text{. . . 3.3.3.2.2(2)}$$

where

l = laterally unbraced length of the member

3.3.3.3 *Members subject to distortional buckling*

The nominal member moment capacity (M_b) of sections subject to distortional buckling shall be calculated as follows:

$$M_b = Z_c f_c \qquad \text{. . . 3.3.3.3(1)}$$

The following cases, as appropriate, apply:

(a) *Where distortional buckling involves rotation of a flange and lip about the flange/web junction of a channel- or Z-section* Z_c is the full section modulus except that when k_φ as given by Equation D2.2.1(2) is negative then Z_c is the effective section modulus calculated at a stress (f_c) in the extreme compression fibre using $k = 4.0$ for the compressive flange in Equation 2.2.1.2(5) and ignoring Clause 2.4.1, where f_c shall be calculated as follows:

$$f_c = \frac{M_c}{Z_f} \qquad \text{. . . 3.3.3.3(2)}$$

where

M_c = critical moment

Z_f = full section modulus

The critical moment (M_c) shall be calculated as follows:

For $\lambda_d \le 0.674$: $M_c = M_y$ . . . 3.3.3.3(3)

For $\lambda_d > 0.674$: $M_c = \frac{M_y}{\lambda_d}\left(1 - \frac{0.22}{\lambda_d}\right)$ . . . 3.3.3.3(4)

(b) *Where distortional buckling involves transverse bending of a vertical web with lateral displacement of the compression flange* Z_c is the effective section modulus calculated at a stress (f_c) in the extreme compression fibre, where f_c shall be calculated using Equation 3.3.3.3(2).

The critical moment (M_c) shall be calculated as follows:

For $\lambda_d \le 0.59$: $M_c = M_y$ . . . 3.3.3.3(5)

For $0.59 < \lambda_d \le 1.70$: $M_c = M_y\left(\frac{0.59}{\lambda_d}\right)$ . . . 3.3.3.3(6)

Accessed by UNIVERSITY OF SOUTH AUSTRALIA on 03 May 2019 (Document currency not guaranteed when printed)

COPYRIGHT

For $\lambda_d > 1.70$: $$M_c = M_y\left(\frac{1}{\lambda_d^2}\right)$$ . . . 3.3.3.3(7)

where

M_y = moment causing initial yield at the extreme compression fibre of the full section

λ_d = non-dimensional slenderness used to determine M_c for member subject to distortional buckling

$$= \sqrt{\frac{M_y}{M_{od}}}$$ . . . 3.3.3.3(8)

M_{od} = elastic buckling moment in the distortional mode

$$= Z_f f_{od}$$ . . . 3.3.3.3(9)

f_{od} = elastic distortional buckling stress determined in accordance with a rational elastic buckling analysis or Paragraph D2.2, Appendix D.

3.3.3.4 *Beams having one flange through-fastened to sheeting*

The nominal member moment capacity (M_b) of a channel- or *Z*-section loaded in a plane parallel to the web, with the tension flange attached to sheeting and with compression flange laterally unbraced, shall be calculated as follows:

$$M_b = RZ_e f_y$$ . . . 3.3.3.4

R = reduction factor

Z_e = Effective section modulus calculated with the extreme compression or tension fibre at f_y

The reduction factor (R) shall be taken as follows:

(a) *Uplift loading* For continuous lapped purlins with three or more spans using Z-sections, and simple spans using channel- and Z-sections with cyclone washers, the R factor shall be as follows:

(i) No bridging ..... 0.75.

(ii) One row of bridging in end and interior spans ..... 0.85.

(iii) Two rows of bridging in end span and one or more rows in interior spans of continuous lapped purlins ..... 0.95.

(iv) Two rows of bridging in simple span ..... 1.00.

NOTE: The combined bending and shear at the end of the lap should be considered for the case with two rows of bridging.

For double spans using Z-section, the R factor shall be as follows:

(A) No bridging ..... 0.60.

(B) One row of bridging per span ..... 0.70.

(C) Two rows of bridging per span ..... 0.80.

NOTE: For simple spans without cyclone washers, the values recommended in the AISI Specification should be used.

Accessed by UNIVERSITY OF SOUTH AUSTRALIA on 03 May 2019 (Document currency not guaranteed when printed)

COPYRIGHT

(b) *Downwards loading* For continuous lapped purlins with three or more spans using Z-section, without bridging or any other configuration, the *R* factor shall be equal to 0.85.

The combined bending and shear at the end of the lap need not be considered separately for this case.

The reduction factor (R) shall be limited to roof and wall systems conforming to the following:

(i) Member depth shall be less than or equal to 300 mm.

(ii) Flanges shall be edge-stiffened compression elements with the lip perpendicular to the stiffened flanges.

(iii) 75 < depth/thickness < 135.

(iv) 2.3 < depth/flange width < 3.2.

(v) 25 < flat width/thickness of flange < 44.

(vi) For continuous span systems, the total lap length at each interior support in each direction (distance between centre-line of bolts at each end of lap) shall be not less than—

(A) 13% of span for triple spans; and

(B) 15% of span for double spans, such that the support bolts are located at the centre of the lap.

(vii) Member span length shall be not greater than 10.5 m.

(viii) For continuous span systems, the longest member span shall be not more than 20% greater than the shortest span.

(ix) Cleat plates shall be used at the supports.

(x) Roof or wall panels shall be steel sheets, minimum of 0.42 mm base metal thickness, having a minimum rib depth of 27 mm, at a maximum spacing of 200 mm on centres and attached in such a manner as to effectively inhibit relative movement between the panel and purlin flange.

(xi) Insulation shall not be used between the roof sheeting and purlins.

(xii) Fastener type shall be minimum No. 12 self-drilling or self-tapping sheet metal screws for triple and double spans, and No. 12 screws with load-spreading washers for simple spans. Side lap fasteners shall be used between the sheets.

(xiii) Screws shall be crest-fastened.

(xiv) Fasteners shall be located at every crest.

(xv) Bridging shall be of a type that effectively prevents lateral and torsional deformations at support points.

If variables fall outside any of the requirements in Items (i) to (xv), full-scale tests shall be made in accordance with Section 8, or another rational analysis procedure shall be applied. In any case, it is permitted to perform tests, in accordance with Section 8, as an alternative to the procedure described in this Clause.

3.3.3.5 *Beams having one flange fastened to a standing seam roof or clip-fixed deck system*

The nominal section moment capacity (M_s) of a channel- or *Z*-section, added in a plane parallel to the web with the top flange supporting a standing seam roof system shall be determined using a discrete point bracing and the provisions of Clause 3.3.3.2.1, or shall be calculated as follows:

Accessed by UNIVERSITY OF SOUTH AUSTRALIA on 03 May 2019 (Document currency not guaranteed when printed)

COPYRIGHT

$M_s = RZ_e f_y$ . . . 3.3.3.5

$\phi_b = 0.9$

where

R = reduction factor determined by testing in accordance with Section 8

Z_e = elastic section modulus of the effective section calculated with extreme compression or tension fibre at f_y

3.3.4 Shear

3.3.4.1 *Shear capacity of webs without holes*

The design shear force (V^*) at any cross-section shall satisfy—

$V^* \leq \phi_v V_v$

where

ϕ_v = capacity reduction factor for shear (see Table 1.6.3)

V_v = nominal shear capacity of the web

The nominal shear capacity (V_v) of a web shall be calculated from the following equations, as appropriate.

For $\frac{d_1}{t_w} \leq \sqrt{\frac{Ek_v}{f_y}}$: $V_v = 0.64 f_y d_1 t_w$ . . . 3.3.4(1)

For $\sqrt{\frac{Ek_v}{f_y}} < \frac{d_1}{t_w} \leq 1.415\sqrt{\frac{Ek_v}{f_y}}$: $V_v = 0.64 t_w^2 \sqrt{Ek_v f_y}$ . . . 3.3.4(2)

For $\frac{d_1}{t_w} > 1.415\sqrt{\frac{Ek_v}{f_y}}$: $V_v = \frac{0.905 Ek_v t_w^3}{d_1}$ . . . 3.3.4(3)

where

d_1 = depth of the flat portion of the web measured along the plane of the web

t_w = thickness of web

k_v = shear buckling coefficient determined as follows:

(i) For unstiffened webs: $k_v = 5.34$

(ii) For beam webs with transverse stiffeners conforming to Clause 2.7—

for $\frac{a}{d_1} \leq 1.0$: $k_v = 4.00 + [5.34/(\frac{a}{d_1})^2]$ . . . 3.3.4(4)

for $\frac{a}{d_1} > 1.0$: $k_v = 5.34 + [4.00/(\frac{a}{d_1})^2]$ . . . 3.3.4(5)

a = shear panel length for unstiffened web element; *or* distance between transverse stiffeners for stiffened web elements

For a web consisting of two or more sheets, each sheet shall be considered as a separate element carrying its share of the shear force.

Accessed by UNIVERSITY OF SOUTH AUSTRALIA on 03 May 2019 (Document currency not guaranteed when printed)

COPYRIGHT

3.3.4.2 *Shear capacity of channel-section webs with holes*

Shear capacity of channel-section webs with holes shall be applicable within the following limits:

(a) $\frac{d_{wh}}{d_1} < 0.7$,

where

d_{wh} = depth of the web hole

d_1 = depth of the flat portion of the web measured along the plane of the web

(b) $\frac{d_{wh}}{t} \leq 200$.

(c) Holes centred at mid-depth of the web.

(d) Clear distance between holes is greater than or equal to 450 mm.

(e) Non-circular holes corner radii greater than or equal to $2t$.

(f) Non-circular holes with $d_{wh} \leq 65$ mm and $b \leq 115$ mm, where b is the length of the web hole.

(g) Circular hole diameters less than or equal to 150 mm.

(h) $d_{wh} > 15$ mm.

The nominal shear capacity (V_v) determined in accordance with Clause 3.3.4.1 shall be multiplied by q_s, where—

$$q_s = 1.0 \text{ when } \frac{c}{t} \geq 54 \qquad \text{. . . 3.3.4.2(1)}$$

$$= \frac{c}{54t} \text{ when } 5 \leq \frac{c}{t} < 54 \qquad \text{. . . 3.3.4.2(2)}$$

$$c = \frac{d_1}{2} - \frac{d_{wh}}{2.83} \text{ for circular holes} \qquad \text{. . . 3.3.4.2(3)}$$

$$= \frac{d_1}{2} - \frac{d_{wh}}{2} \text{ for non-circular holes} \qquad \text{. . . 3.3.4.2(4)}$$

d_{wh} = depth of web hole

d_1 = depth of flat portion of the web measured along the plane of the web

3.3.5 Combined bending and shear

For beams with unstiffened webs, the design bending moment (M^*) and the design shear force (V^*) shall satisfy—

$$\left(\frac{M^*}{\phi_b M_s}\right)^2 + \left(\frac{V^*}{\phi_v V_v}\right)^2 \leq 1.0 \qquad \text{. . . 3.3.5(1)}$$

For beams with transverse web stiffeners, the design bending moment (M^*) shall satisfy—

$$M^* \leq \phi_b M_b \qquad \text{. . . 3.3.5(2)}$$

Accessed by UNIVERSITY OF SOUTH AUSTRALIA on 03 May 2019 (Document currency not guaranteed when printed)

COPYRIGHT

The design shear force (V^*) shall satisfy—

$$V^* \le \phi_v V_v \qquad \text{. . . 3.3.5(3)}$$

If $\dfrac{M^*}{\phi_b M_s} > 0.5$; and

$$\frac{V^*}{\phi_v V_v} > 0.7$$

then M^* and V^* shall satisfy—

$$0.6\left(\frac{M^*}{\phi_b M_s}\right) + \left(\frac{V^*}{\phi_v V_v}\right) \le 1.3 \qquad \text{. . . 3.3.5(4)}$$

where

M_s = nominal section moment capacity about the centroidal axes determined in accordance with Clause 3.3.2

V_v = nominal shear capacity when shear alone exists determined in accordance with Clause 3.3.4

M_b = nominal member moment capacity when bending alone exists determined in accordance with Clause 3.3.3.

3.3.6 Bearing

3.3.6.1 *Design for bearing*

A member subject to bearing (R_b^*) shall satisfy—

$$R_b^* \le \phi_w R_b \qquad \text{. . . 3.3.6.1}$$

where

ϕ_w = capacity reduction factor for bearing (see Table 1.6.3)

R_b = nominal capacity for concentrated load or reaction for one solid web connecting top and bottom flanges

3.3.6.2 *Bearing without holes*

The nominal capacity for concentrated load or reaction for one solid web connecting top and bottom flanges (R_b) shall be determined as follows:

$$R_b = C t_w^2 f_y \sin\theta \left(1 - C_r\sqrt{\frac{r_i}{t_w}}\right)\left(1 + C_l\sqrt{\frac{l_b}{t_w}}\right)\left(1 - C_w\sqrt{\frac{d_1}{t_w}}\right) \qquad \text{. . . 3.3.6.2}$$

where

C = coefficient [see Tables 3.3.6.2(A) to (E)]

t_w = thickness of the web

θ = angle between the plane of the web and the plane of the bearing surface. θ shall be within the following limits:

$90° \ge \theta \ge 45°$

C_r = coefficient of inside bent radius [see Tables 3.3.6.2(A) to (E)]

r_i = inside bent radius

C_l = coefficient of bearing length [see Tables 3.3.6.2(A) to (E)]

Accessed by UNIVERSITY OF SOUTH AUSTRALIA on 03 May 2019 (Document currency not guaranteed when printed)

COPYRIGHT

l_b = actual bearing length. For the case of two equal and opposite concentrated loads distributed over unequal bearing lengths, the smaller value of l_b shall be taken

C_w = coefficient of web slenderness [see Tables 3.3.6.2(A) to 3.3.6.2(E)]

d_1 = depth of the flat portion of the web measured along the plane of the web

Webs of members in bending for which d_1/t_w is greater than 200 shall be provided with adequate means of transmitting concentrated actions or reactions directly into the web(s).

R_b is the nominal capacity for load or reaction for one solid web connecting top and bottom flanges. For webs consisting of two or more such sheets, R_b shall be calculated for each individual sheet and the results added to obtain the nominal load or reaction for the full section.

One-flange loading or reaction occurs when the clear distance between the bearing edges of adjacent opposite concentrated actions or reactions is greater than $1.5d_1$.

Two-flange loading or reaction occurs when the clear distance between the bearing edges of adjacent opposite concentrated actions or reactions is less than or equal to $1.5d_1$.

End loading or reaction occurs when the distance from the edge of the bearing to the end of the member is less than or equal to $1.5d_1$.

Interior loading or reaction occurs when the distance from the edge of the bearing to the end of the member is greater than $1.5d_1$.

The capacity reduction factors shall be as given in Tables 3.3.6.2(A) to 3.3.6.2(E).

TABLE 3.3.6.2(A)

BACK-TO-BACK CHANNEL-SECTIONS

Support and flange conditions		Load cases		C	C_r	C_l	C_w	ϕ_w	Limits
Fastened to support	Stiffened or partially stiffened flanges	One-flange loading or reaction	End	10	0.14	0.28	0.001	0.75	$r_1/t_w \leq 5$
			Interior	20	0.15	0.05	0.003	0.90	$r_1/t_w \leq 5$
Unfastened	Stiffened or partially stiffened flanges	One-flange loading or reaction	End	10	0.14	0.28	0.001	0.75	$r_1/t_w \leq 5$
			Interior	20.5	0.17	0.11	0.001	0.85	$r_1/t_w \leq 3$
		Two-flange loading or reaction	End	15.5	0.09	0.08	0.04	0.75	$r_1/t_w \leq 3$
			Interior	36	0.14	0.08	0.04	0.75	
	Unstiffened flanges	One-flange loading or reaction	End	10	0.14	0.28	0.001	0.75	$r_1/t_w \leq 5$
			Interior	20.5	0.17	0.11	0.001	0.85	$r_1/t_w \leq 3$

NOTES:

1 Table 3.3.6.2(A) applies to I-beams made from two channels connected back to back.

2 The coefficients in Table 3.3.6.2(A) apply if $l_b/t_w \leq 210$, $l_b/d_1 \leq 1.0$ and $\theta = 90°$.

Accessed by UNIVERSITY OF SOUTH AUSTRALIA on 03 May 2019 (Document currency not guaranteed when printed)

COPYRIGHT

TABLE 3.3.6.2(B)

SINGLE WEB CHANNEL-SECTIONS AND C-SECTIONS

Support and flange conditions		Load cases		C	C_r	C_l	C_w	ϕ_w	Limits
Fastened to support	Stiffened or partially stiffened flanges	One-flange loading or reaction	End	4	0.14	0.35	0.02	0.85	$r_i/t_w \le 9$
			Interior	13	0.23	0.14	0.01	0.90	$r_i/t_w \le 5$
		Two-flange loading or reaction	End	7.5	0.08	0.12	0.048	0.85	$r_i/t_w \le 12$
			Interior	20	0.10	0.08	0.031	0.85	$r_i/t_w \le 12$
Unfastened	Stiffened or partially stiffened flanges	One-flange loading or reaction	End	4	0.14	0.35	0.02	0.80	$r_i/t_w \le 5$
			Interior	13	0.23	0.14	0.01	0.90	
		Two-flange loading or reaction	End	13	0.32	0.05	0.04	0.90	$r_i/t_w \le 3$
			Interior	24	0.52	0.15	0.001	0.80	
	Unstiffened flanges	One-flange loading or reaction	End	4	0.40	0.60	0.03	0.85	$r_i/t_w \le 2$
			Interior	13	0.32	0.10	0.01	0.85	$r_i/t_w \le 1$
		Two-flange loading or reaction	End	2	0.11	0.37	0.01	0.75	$r_i/t_w \le 1$
			Interior	13	0.47	0.25	0.04	0.80	

NOTE: The coefficients in Table 3.3.6.2(B) apply if $d_1/t_w \le 200$, $l_b/t_w \le 210$, $l_b/d_1 \le 2.0$ and $\theta = 90°$

TABLE 3.3.6.2(C)

SINGLE WEB Z-SECTIONS

Support and flange conditions		Load cases		C	C_r	C_l	C_w	ϕ_w	Limits
Fastened to support	Stiffened or partially stiffened flanges	One-flange loading or reaction	End	4	0.14	0.35	0.02	0.85	$r_i/t_w \le 9$
			Interior	13	0.23	0.14	0.01	0.90	$r_i/t_w \le 5$
		Two-flange loading or reaction	End	9	0.05	0.16	0.052	0.85	$r_i/t_w \le 12$
			Interior	24	0.07	0.07	0.04	0.80	$r_i/t_w \le 12$
Unfastened	Stiffened or partially stiffened flanges	One-flange loading or reaction	End	5	0.09	0.02	0.001	0.85	$r_i/t_w \le 5$
			Interior	13	0.23	0.14	0.01	0.90	
		Two-flange loading or reaction	End	13	0.32	0.05	0.04	0.90	$r_i/t_w \le 3$
			Interior	24	0.52	0.15	0.001	0.80	
	Unstiffened flanges	One-flange loading or reaction	End	4	0.40	0.60	0.03	0.85	$r_i/t_w \le 2$
			Interior	13	0.32	0.10	0.01	0.85	$r_i/t_w \le 1$
		Two-flange loading or reaction	End	2	0.11	0.37	0.01	0.75	$r_i/t_w \le 1$
			Interior	13	0.47	0.25	0.04	0.80	

NOTE: The coefficients in Table 3.3.6.2(C) apply if $d_1/t_w \le 200$, $l_b/t_w \le 210$, $l_b/d_1 \le 2.0$ and $\theta = 90°$

Accessed by UNIVERSITY OF SOUTH AUSTRALIA on 03 May 2019 (Document currency not guaranteed when printed)

COPYRIGHT

TABLE 3.3.6.2(D)

SINGLE HAT SECTIONS

Support conditions	Load cases		C	C_r	C_l	C_w	ϕ_w	Limits
Fastened to support	One-flange loading or reaction	End	4	0.25	0.68	0.04	0.75	$r_i/t_w \le 5$
		Interior	17	0.13	0.13	0.04	0.80	$r_i/t_w \le 10$
	Two-flange loading or reaction	End	9	0.10	0.07	0.03	0.85	$r_i/t_w \le 10$
		Interior	10	0.14	0.22	0.02	0.85	
Unfastened	One-flange loading or reaction	End	4	0.25	0.68	0.04	0.75	$r_i/t_w \le 4$
		Interior	17	0.13	0.13	0.04	0.90	$r_i/t_w \le 4$

NOTE: The coefficients in Table 3.3.6.2(D) apply if $d_1/t_w \le 200$, $l_b/t_w \le 200$, $l_b/d_1 \le 2.0$ and $\theta = 90°$

TABLE 3.3.6.2(E)

MULTI-WEB DECK SECTIONS

Support conditions	Load cases		C	C_r	C_l	C_w	ϕ_w	Limits
Fastened to support	One-flange loading or reaction	End	4	0.04	0.25	0.025	0.90	$r_i/t_w \le 20$
		Interior	8	0.10	0.17	0.004	0.85	$r_i/t_w \le 10$
	Two-flange loading or reaction	End	9	0.12	0.14	0.040	0.85	$r_i/t_w \le 10$
		Interior	10	0.11	0.21	0.020	0.85	
Unfastened	One-flange loading or reaction	End	3	0.04	0.29	0.028	0.60	$r_i/t_w \le 20$
		Interior	8	0.10	0.17	0.004	0.85	
		End	6	0.16	0.15	0.050	0.90	$r_i/t_w \le 5$
		Interior	17	0.10	0.10	0.046	0.90	

NOTE: The coefficients in Table 3.3.6.2(E) apply if $d_1/t_w \le 200$, $l_b/t_w \le 210$, $l_b/d_1 \le 3.0$ and $45° < \theta \le 90°$

3.3.6.3 *Web crippling strength of channel-section webs with holes*

When a web hole is within the bearing length (l_b), a bearing stiffener shall be used. For beam webs with holes, the web crippling strength shall be calculated in accordance with Clause 3.3.6.2 multiplied by the reduction factor (R_c) given in this Clause.

Web crippling strength of channel-section webs with holes, as determined by Clause 3.3.6.2, shall be applicable within the following limits:

(a) $\dfrac{d_{wh}}{d_1} < 0.7.$

(b) $\dfrac{d_1}{t} \le 200.$

(c) Holes centred at mid-depth of the web.

(d) Clear distance between holes is greater than or equal to 450 mm.

(e) Distance between the end of the member and the edge of the hole is greater than or equal to d.

(f) Non-circular holes corner radii greater than or equal to $2t$.

(g) Non-circular holes with $d_{wh} \le 65$ mm and $b \le 115$ mm.

Accessed by UNIVERSITY OF SOUTH AUSTRALIA on 03 May 2019 (Document currency not guaranteed when printed)

COPYRIGHT

(h) Circular hole diameters less than or equal to 150 mm.

(i) $d_{wh} > 15$ mm.

When a web hole is not within the bearing length ($l_b \geq 25$ mm):

$$R_c = 1.01 - \frac{0.325 d_{wh}}{d_l} + \frac{0.083x}{d_l} \leq 1.0 \qquad \text{. . . 3.3.6.3(1)}$$

When any portion of a web hole is not within the bearing length ($l_b \geq 75$ mm):

$$R_c = 0.90 - \frac{0.047 d_{wh}}{d_l} + \frac{0.053x}{d_l} \leq 1.0 \qquad \text{. . . 3.3.6.3(2)}$$

where

l_b = bearing length

d = depth of cross-section

x = nearest distance between the web hole and the edge bearing

3.3.7 Combined bending and bearing

Unstiffened flat webs of shapes subjected to a combination of bending and reaction or concentrated load shall be designed as follows:

(a) *Shapes having single unstiffened webs* Shapes having single unstiffened webs shall satisfy—

$$1.07\left(\frac{R^*}{\phi_w R_b}\right) + \left(\frac{M^*}{\phi_b M_s}\right) \leq 1.42 \qquad \text{. . . 3.3.7(1)}$$

At the interior supports of continuous spans, the above interaction is not applicable to deck or beams with two or more single webs, where the compression edges of adjacent webs are laterally supported in the negative moment region by continuous or intermittently connected flange elements, rigid cladding, or lateral bracing, and the spacing between adjacent webs does not exceed 250 mm.

(b) *Back-to-back channel beams and beams with restraint against web rotation* Back-to-back channel beams and beams with restraint against web rotation, such as I-sections made by welding two angles to a channel, shall satisfy—

$$0.82\left(\frac{R^*}{\phi_w R_b}\right) + \left(\frac{M^*}{\phi_b M_s}\right) \leq 1.32 \qquad \text{. . . 3.3.7(2)}$$

If $\frac{d_1}{t_w} \leq \frac{2.33}{\sqrt{\left(\frac{f_y}{E}\right)}}$ and $\lambda \leq 0.673$, the nominal concentrated load or reaction strength may be determined in accordance with Clause 3.3.6.

In Items (a) and (b), the following applies:

R^* = design concentrated load or reaction in the presence of bending moment

R_b = nominal capacity for concentrated load or reaction in the absence of bending moment assuming single web interior one flange loading for the nested Z-sections, i.e., the sum of the two webs evaluated individually determined in accordance with Clause 3.3.6

ϕ_b = capacity reduction factor for bending

ϕ_w = capacity reduction factor for bearing

Accessed by UNIVERSITY OF SOUTH AUSTRALIA on 03 May 2019 (Document currency not guaranteed when printed)

COPYRIGHT

M^* = design bending moment at, or immediately adjacent to, the point of application of the design concentrated load or reaction (R^*)

M_s = nominal section moment capacity about the centroidal axes determined in accordance with Clause 3.3.1

t_w = thickness of the web

λ = slenderness ratio (see Clause 2.2.1.2)

(c) *Two nested Z-sections* Two nested Z-sections shall satisfy—

$$0.85\left(\frac{R^*}{\phi R_b}\right)+\left(\frac{M^*}{\phi M_s}\right)\leq 1.65 \qquad \ldots 3.3.7(3)$$

where

R^* = design concentrated action or reaction in the presence of bending moment

R_b = nominal capacity for concentrated action or reaction in the absence of bending moment assuming single web interior one flange loading for the nested Z-sections, i.e. the sum of the two webs evaluated individually determined in accordance with Clause 3.3.6

ϕ = 0.9

M^* = design bending moment at the section under consideration to, the point of application of the design concentrated load or reaction (R^*)

M_s = nominal section moment capacity for the two nested Z-sections, i.e. the sum of the two sections evaluated individually, determined in accordance with Clause 3.3.1. When used in conjunction with the Direct Strength Method in Section 7, M_s shall be taken as the local buckling capacity M_{bl} according to Clause 7.2.2.3, with M_{be} equal to M_y.

In addition, M^* and R^* shall satisfy—

$$M^* \leq \phi M_s \qquad \ldots 3.3.7(4)$$

$$R^* \leq \phi R_b \qquad \ldots 3.3.7(5)$$

Equation 3.3.7(3) applies, if—

(i) $d_1/t \leq 150$;

(ii) $l_b/t_w \leq 140$;

(iii) $f_y \leq 480$ MPa; and

(iv) $r_i/t \leq 5.5$.

The following conditions shall be satisfied:

(A) The ends of each section shall be connected to the other section by a minimum of two 12.0 mm diameter A307 bolts through the web.

(B) The combined section shall be connected to the support by a minimum of two 12.0 mm A307 bolts through the flanges.

(C) The webs of the two sections shall be in contact.

(D) The ratio of the thicker to the thinner part shall not exceed 1.3.

Accessed by UNIVERSITY OF SOUTH AUSTRALIA on 03 May 2019 (Document currency not guaranteed when printed)

COPYRIGHT

3.3.8 Stiffeners

3.3.8.1 *Transverse stiffeners*

Transverse stiffeners attached to beam webs at points of concentrated loads or reactions shall be designed as compression members. Concentrated loads or reactions shall be applied directly into the stiffeners, or each stiffener shall be fitted accurately to the flat portion of the flange to provide direct loadbearing into the end of the stiffener. Means for shear transfer between the stiffener and the web shall be provided in accordance with Clause 3.3.8.2. The design concentrated loads or reactions (N^*) shall satisfy the following:

(a) $N^* \leq \phi_c N_s$ . . . 3.3.8.1(1)

(b) $N^* \leq \phi_c N_c$ . . . 3.3.8.1(2)

where

ϕ_c = capacity reduction factor for members in compression (see Table 1.6.3)

N_s = nominal section capacity of a member in compression (see Clause 3.4)

= $f_{wy} A_{s1}$

N_c = nominal member capacity of a member in compression (see Clause 3.4)

= $f_n A_{s2}$

f_{wy} = lower yield stress value of the beam web (f_y) or of the stiffener section (f_{ys})

f_n = critical stress (see Clause 3.4)

A_{s1}, A_{s2} = area of a member in compression consisting of the transverse stiffeners and a portion of the web

A_{s1} = $18t^2 + A_s$ . . . 3.3.8.1(3)

(for transverse stiffeners at interior support and under concentrated load)

= $10t^2 + A_s$ . . . 3.3.8.1(4)

(for transverse stiffeners at end support)

A_{s2} = $b_1 t + A_s$ . . . 3.3.8.1(5)

(for transverse stiffeners at interior support and under concentrated load)

= $b_2 t + A_s$ . . . 3.3.8.1(6)

(for transverse stiffeners at end support)

t = base thickness of beam web

A_s = cross-sectional area of transverse stiffeners

$$b_1 = 25t\left[0.0024\left(\frac{l_{st}}{t}\right) + 0.72\right] \leq 25t \quad \text{. . . 3.3.8.1(7)}$$

$$b_2 = 25t\left[0.0044\left(\frac{l_{st}}{t}\right) + 0.83\right] \leq 12t \quad \text{. . . 3.3.8.1(8)}$$

l_{st} = length of transverse stiffener

Accessed by UNIVERSITY OF SOUTH AUSTRALIA on 03 May 2019 (Document currency not guaranteed when printed)

COPYRIGHT

The b/t_s ratio for the stiffened and unstiffened elements of cold-formed steel transverse stiffeners shall not exceed $1.28\sqrt{\left(\frac{E}{f_{ys}}\right)}$ and $0.37\sqrt{\left(\frac{E}{f_{ys}}\right)}$, respectively, where f_{ys} is the yield stress and t_s is the thickness of the stiffener steel.

3.3.8.2 *Bearing stiffeners in channel-section flexural members*

For two-flange loading of channel-section flexural members with bearing stiffeners that do not meet the requirements of Clause 3.3.8.1, the design bearing capacity ($\phi_w R_b$) shall be determined from—

$$R_b = 0.7(R_{wc} + A_e f_y) \geq R_{wc} \qquad \ldots 3.3.8.2$$

where

ϕ_w = capacity reduction factor for bearing stiffeners (see Table 1.6.3)

R_{wc} = web crippling capacity (R_b) for channel-section flexural member calculated in accordance with Equation 3.3.6.1 for single web members, at the end or interior locations

A_e = effective area of the bearing stiffener subjected to uniform compressive stress, calculated at yield point

f_y = yield point of the bearing stiffener steel

Equation 3.3.8.2 applies within the following limits:

(a) Full bearing of the stiffener is required. If the bearing width is narrower than the stiffener such that one of the stiffener flanges is unsupported, R_b shall be reduced by 50%.

(b) Stiffeners shall be channel-section stud or track members with a minimum web depth of 90 mm and a minimum base steel thickness of 0.85 mm.

(c) The stiffener shall be attached to the flexural member web with at least three fasteners (screws or bolts).

(d) The distance from the flexural member flanges to the first fastener(s) shall be not less than $d/8$, where d is the overall depth of the flexural member.

(e) The length of the stiffener shall be not less than the depth of the flexural member minus 10 mm.

(f) The bearing width shall be not less than 40 mm.

3.3.8.3 *Shear stiffeners*

Where shear stiffeners are required, the spacing shall be such that the design shear force shall not exceed the design shear capacity ($\phi_v V_v$) specified in Clause 3.3.4, and the ratio $\frac{a}{d_1}$ shall exceed neither $\left[\frac{260}{\left(\frac{d_1}{t}\right)}\right]^2$ nor 3.0.

The actual second moment of area ($I_{s,min.}$) of a pair of attached shear stiffeners, or of a single shear stiffener, with reference to an axis in the plane of the web, shall have a minimum value as follows:

Accessed by UNIVERSITY OF SOUTH AUSTRALIA on 03 May 2019 (Document currency not guaranteed when printed)

COPYRIGHT

$$I_{s,\min.} = 5d_1t^3\left[\frac{d_1}{a} - 0.7\left(\frac{a}{d_1}\right)\right] \geq \left(\frac{d_1}{50}\right)^4 \qquad \text{. . . 3.3.8.3(1)}$$

The gross area of shear stiffeners (A_{st}) shall be not less than—

$$A_{st} = \left(\frac{1-k_s}{2}\right)\left\{\frac{a}{d_1} - \frac{\left(\frac{a}{d_1}\right)^2}{\left[\frac{a}{d_1} + \sqrt{1+\left(\frac{a}{d_1}\right)^2}\right]}\right\}\psi k_{st} d_1 t \qquad \text{. . . 3.3.8.3(2)}$$

where

k_s = shear stiffener coefficient

$$= \frac{1.53Ek_v}{f_y\left(\frac{d_1}{t}\right)^2} \text{ if } k_s \leq 0.8 \qquad \text{. . . 3.3.8.3(3)}$$

$$= \frac{1.11}{\left(\frac{d_1}{t}\right)}\left(\sqrt{\frac{k_v}{f_y}}\right) \text{ if } k_s > 0.8 \qquad \text{. . . 3.3.8.3(4)}$$

$$\psi = \frac{\text{yield stress of web}}{\text{yield stress of stiffener}}$$

k_{st} = stiffener type coefficient

= 1.0 for stiffeners in pairs

= 1.8 for single-angle stiffeners

= 2.4 for single-plate stiffeners

k_v = shear buckling coefficient

$$= 4.00 + \frac{5.34}{\left(\frac{a}{d_1}\right)^2} \text{ if } \frac{a}{d_1} \leq 1.0 \qquad \text{. . . 3.3.8.3(5)}$$

$$= 5.34 + \frac{5.34}{\left(\frac{a}{d_1}\right)^2} \text{ if } \frac{a}{d_1} > 1.0 \qquad \text{. . . 3.3.8.3(6)}$$

a = distance between transverse stiffeners

3.3.8.4 *Non-conforming stiffeners*

The design capacity of members with transverse stiffeners that do not conform to Clauses 3.3.8.1 or 3.3.8.2, such as stamped or rolled-in transverse stiffeners, shall be determined by tests in accordance with Section 8.

Accessed by UNIVERSITY OF SOUTH AUSTRALIA on 03 May 2019 (Document currency not guaranteed when printed)

COPYRIGHT

3.4 CONCENTRICALLY LOADED COMPRESSION MEMBERS

3.4.1 General

This Clause applies to members in which the resultant of all loads acting on the member is an axial load passing through the centroid of the effective section calculated at the critical stress (f_n). The design compressive axial force (N^*) shall satisfy the following:

(a) $N^* \leq \phi_c N_s$

(b) $N^* \leq \phi_c N_c$

where

ϕ_c = capacity reduction factor for members in compression (see Table 1.6.3)

N_s = nominal section capacity of the member in compression

$$= A_e f_y \qquad \text{. . . 3.4.1(1)}$$

A_e = effective area at yield stress (f_y)

N_c = nominal member capacity of the member in compression

$$= A_e f_n \qquad \text{. . . 3.4.1(2)}$$

A_e = effective area at the critical stress (f_n)

For sections with circular holes, A_e shall be determined in accordance with Clause 2.2.2.2. If the product of the number of holes in the effective length region and the hole diameter divided by the effective length does not exceed 0.015, A_e may be determined ignoring the holes

f_n = critical stress, and shall be determined from Equation 3.4.1(3) or Equation 3.4.1(4), as appropriate

$$\text{For } \lambda_c \leq 1.5\text{: } f_n = \left(0.658^{\lambda_c^2}\right) f_y \qquad \text{. . . 3.4.1(3)}$$

$$\text{For } \lambda_c > 1.5\text{: } f_n = \left(\frac{0.877}{\lambda_c^2}\right) f_y \qquad \text{. . . 3.4.1(4)}$$

where

λ_c = non-dimensional slenderness used to determine f_n

$$= \sqrt{\frac{f_y}{f_{oc}}} \qquad \text{. . . 3.4.1(5)}$$

f_{oc} = least of the elastic flexural, torsional and flexural-torsional buckling stress determined in accordance with Paragraph D1.1, Appendix D, or a rational elastic buckling analysis

Concentrically loaded angle sections shall be designed for an additional bending moment as specified in the definition of M_y^* specified in Clause 3.5.1.

NOTE: The slenderness ratio (l_e/r) of all compression members should not exceed 200, except that only during construction l_e/r should not exceed 300.

For G550 steel to AS 1397 less than 0.9 mm in thickness, a reduced radius of gyration (γr) shall be used in computing f_{oc} for use in Equation 3.4.1(5) when the value of the effective length (l_e) is less than $1.1l_o$,

where

Accessed by UNIVERSITY OF SOUTH AUSTRALIA on 03 May 2019 (Document currency not guaranteed when printed)

COPYRIGHT

$$l_o = \pi r \sqrt{\frac{E}{f_{cr}}} \qquad \text{. . . 3.4.1(6)}$$

f_{cr} = plate elastic buckling stress

$$\gamma = 0.65 + \left(\frac{0.35 l_e}{1.1 l_o} \right) \qquad \text{. . . 3.4.1(7)}$$

NOTES:

1 In frames where lateral stability is provided by diagonal bracing, shear walls, attachment to an adjacent structure having adequate lateral stability, or floor slabs or roof decks secured horizontally by walls or bracing systems parallel to the plane of the frame, and in trusses, the effective length (l_e) for compression members that do not depend upon their own bending stiffness for lateral stability of the frame or truss should be taken as equal to the unbraced length (l), unless analysis shows that a smaller value may be used.

2 In a frame that depends upon its own bending stiffness for lateral stability, the effective length (l_e) of the compression members should be determined by a rational method and should be not less than the actual unbraced length.

For singly-symmetric unstiffened angle sections for which the effective area (A_e) at stress (f_y) is equal to the full unreduced cross-sectional area (A_g), f_{oc} shall be calculated assuming only flexural buckling.

3.4.2 Singly-symmetric sections [see Figure 1.3(E)(c)] subject to distortional buckling

For monosymmetric sections subject to distortional buckling, such as lipped channels with additional rear flanges, the value of N_c in Equation 3.4.1(2) shall be the lesser of the following:

(a) $A_e f_n$ calculated in accordance with Equations 3.4.1(3) and 3.4.1(4).

(b) For $f_{od} > \frac{f_y}{2}$: $$A f_n = A_g \left(1 - \frac{f_y}{4 f_{od}} \right) \qquad \text{. . . 3.4.2.(1)}$$

(c) For $\frac{f_y}{13} \le f_{od} \le \frac{f_y}{2}$: $$A f_n = A_g \left[0.055 \left(\sqrt{\frac{f_y}{f_{od}}} - 3.6 \right)^2 + 0.237 \right] \qquad \text{. . . 3.4.2.(2)}$$

f_{od} shall be calculated using either the appropriate equations given in Paragraph D1.2, Appendix D, or a rational elastic buckling analysis. A_g is the area of the full cross-section.

3.4.3 Columns with one flange through-fastened to sheeting

This Clause applies to channel- or Z-sections concentrically loaded along their longitudinal axis, with only one flange attached to sheeting by screw fasteners.

The nominal member capacity (N_c) in axial compression of simple span or continuous channels or Z-sections shall be determined from the following equation:

For strong axis: The equations given in Clauses 3.5.1 and 3.5.2 shall be used.

For weak axis:

$$N_c = (0.79s + 0.54)(0.046t + 0.93)(0.1b_f - 0.064d + 22.8)\frac{EA_g}{29500} \qquad \text{. . . 3.4.3}$$

where

s = fastener distance from the centre-line of the web divided by the flange width for Z-sections; *or*

flange width minus the fastener distance from the centre-line of the web divided

Accessed by UNIVERSITY OF SOUTH AUSTRALIA on 03 May 2019 (Document currency not guaranteed when printed)

COPYRIGHT

by the flange width for channel-sections

t = thickness of the channel- or Z-section

b_f = flange width of the channel- or Z-section

d = depth of the channel- or Z-section

A_g = gross cross-sectional area of the channel- or Z-section

NOTE: Units of t, b_f and d in Equation 3.4.3 are in millimetres, since Equation 3.4.3 is not non-dimensional.

Equation 3.4.3 shall be limited to roof and wall systems conforming to the following:

(i) Channel- and Z-sections not exceeding 3.2 mm in thickness.

(ii) Channel- and Z-sections with depths of 150 to 300 mm.

(iii) Flanges are edge-stiffened compression elements.

(iv) 70 ≤ depth/thickness ≤170.

(v) 2.8 ≤ depth/flange width <5.

(vi) 16 ≤ flat width/thickness of flange <50.

(vii) Both flanges prevented from moving laterally at the supports.

(viii) Roof or wall panels with fasteners spaced 300 mm on centre or less and having a minimum rotational lateral stiffness of 10.3 kN/mm^2 (fastener at mid-flange width as determined in accordance with AISI S901).

(ix) Minimum yield stress of 230 MPa.

(x) Span lengths from 4.5 m to 9 m.

3.5 COMBINED AXIAL COMPRESSION OR TENSION, AND BENDING

3.5.1 Combined axial compression and bending

The design axial compression (N^*), and the design bending moments (M_x^* and M_y^*) about the x- and y-axes of the effective section, respectively, shall satisfy the following:

(a) $$\frac{N^*}{\phi_c N_c} + \frac{C_{mx} M_x^*}{\phi_b M_{bx} \alpha_{nx}} + \frac{C_{my} M_y^*}{\phi_b M_{by} \alpha_{ny}} \le 1.0 \qquad \text{. . . 3.5.1(1)}$$

(b) $$\frac{N^*}{\phi_c N_s} + \frac{M_x^*}{\phi_b M_{bx}} + \frac{M_y^*}{\phi_b M_{by}} \le 1.0 \qquad \text{. . . 3.5.1(2)}$$

If $N^*/\phi_c N_c \le 0.15$, the following interaction may be used in lieu of Items (a) and (b

$$\frac{N^*}{\phi_c N_c} + \frac{M_x^*}{\phi_b M_{bx}} + \frac{M_y^*}{\phi_b M_{by}} \le 1.0 \qquad \text{. . . 3.5.1(3)}$$

where

N_c = nominal member capacity of the member in compression determined in accordance with Clause 3.4

C_{mx}, C_{my} = coefficients for unequal end moment whose value shall be taken as follows:

Accessed by UNIVERSITY OF SOUTH AUSTRALIA on 03 May 2019 (Document currency not guaranteed when printed)

COPYRIGHT

(i) For compression members in frames subject to joint translation (side-sway):

$C_m = 0.85$

(ii) For restrained compression members in frames braced against joint translation and not subject to transverse loading between their supports in the plane of bending:

$$C_m = 0.6 - 0.4(M_1/M_2) \quad \ldots 3.5.1(4)$$

M_1/M_2 is the ratio of the smaller to the larger moment at the ends of that portion of the member under consideration which is unbraced in the plane of bending. M_1/M_2 is positive if the member is bent in reverse curvature and negative if it is bent in single curvature.

(iii) For compression members in frames braced against joint translation in the plane of loading and subject to transverse loading between their supports, the value of C_m may be determined by rational analysis. However, in lieu of such analysis, the following values may be used:

(A) For members whose ends are restrained

$C_m = 0.85$

(B) For members whose ends are unrestrained

$C_m + 1.0$

M_x^*, M_y^* = design bending moment about the *x*- and *y*-axes of the effective section, respectively, determined for the design axial force alone using first order elastic analysis as per Paragraph B2, Appendix B. Modification to Equation 3.5.1(1) when using second order elastic analysis is provided in Paragraph B3, Appendix B.

For singly-symmetric unstiffened angle sections with unreduced effective area, M_y^* shall be permitted to be taken as the design bending moment only. For other angle sections or singly-symmetric unstiffened angles for which the effective area (A_e) at stress (f_y) is less than the full unreduced cross-sectional area (A), M_y^* shall be taken either as the design bending moment, or the required flexural moment plus $N^*l/1000$, whichever results in a lower value of N_c, where l is the length of a compression member as defined in Clause 1.3.21

M_{bx}, M_{by} = nominal member moment capacity about the *x*- and *y*-axes, respectively, determined in accordance with Clause 3.3.3

ϕ_b = capacity reduction factor for bending

= 0.95 and 0.90 for bending strength (see Table 1.6.3); *or*

0.90 for laterally unbraced beam (see Table 1.6.3)

ϕ_c = capacity reduction factor for members in compression

= 0.85

N_s = nominal section capacity of the member in compression determined in accordance with Clause 3.4, with f_n equal to f_y

Accessed by UNIVERSITY OF SOUTH AUSTRALIA on 03 May 2019 (Document currency not guaranteed when printed)

COPYRIGHT

α_{nx}, α_{ny} = moment amplification factors

$$= 1 - \left(\frac{N^*}{N_e}\right) \quad \text{. . . 3.5.1(5)}$$

N_e = elastic buckling load

$$= \frac{\pi^2 E I_b}{(l_{eb})^2} \quad \text{. . . 3.5.1(6)}$$

I_b = second moment of area of the full, unreduced cross-section about the bending axis

l_{eb} = effective length in the plane of bending

In addition, each individual ratio in Equations 3.5.1(1), 3.5.1(2) and 3.5.1(3) shall not exceed unity.

3.5.2 Combined axial tension and bending

The design axial tension (N^*), and the required bending moments $\left(M_x^*\right)$ and $\left(M_y^*\right)$ about the x- and y-axes of the effective section, respectively, shall satisfy the following:

(a)
$$\frac{M_x^*}{\phi_b M_{bx}} + \frac{M_y^*}{\phi_b M_{by}} - \frac{N^*}{\phi_t N_t} \le 1.0 \quad \text{. . . 3.5.2(1)}$$

(b)
$$\frac{N^*}{\phi_t N_t} + \frac{M_x^*}{\phi_b M_{sxf}} + \frac{M_y^*}{\phi_b M_{syf}} \le 1.0 \quad \text{. . . 3.5.2(2)}$$

where

N_t = nominal section capacity of the member in tension determined in accordance with Clause 3.2

M_{sxf}, M_{syf} = nominal section yield moment capacity of the full section about the x-axis and y-axis, respectively

$$= Z_{ft} f_y \quad \text{. . . 3.5.2(3)}$$

Z_{ft} = section modulus of the full unreduced section for the extreme tension fibre about the appropriate axis

M_{bx}, M_{by} = nominal member moment capacity about the x- and y-axes, respectively, of the effective section

3.6 CYLINDRICAL TUBULAR MEMBERS

3.6.1 General

This Clause applies to cylindrical tubular members having a ratio of outside diameter to wall thickness (d_o/t) not greater than $0.441E/f_y$.

3.6.2 Bending

For flexural members, the design bending moment (M^*) uncoupled from axial load, shear and local concentrated forces or reactions shall satisfy—

$$M^* \le \phi_b M_b$$

where M_b is the nominal member moment capacity and shall be calculated from the following equations, as appropriate.

Accessed by UNIVERSITY OF SOUTH AUSTRALIA on 03 May 2019 (Document currency not guaranteed when printed)

COPYRIGHT

For $\frac{d_o}{t} \le \frac{0.0714E}{f_y}$: $M_b = 1.25 f_y Z_f$ . . . 3.6.2(1)

For $\frac{0.0714E}{f_y} < \frac{d_o}{t} \le \frac{0.318E}{f_y}$: $M_b = \left[0.970 + 0.020\frac{\left(\frac{E}{f_y}\right)}{\left(\frac{d_o}{t}\right)}\right] f_y Z_f$ . . . 3.6.2(2)

For $\frac{0.318E}{f_y} < \frac{d_o}{t} \le \frac{0.441E}{f_y}$: $M_b = \frac{0.328EZ_f}{\left(\frac{d_o}{t}\right)}$ . . . 3.6.2(3)

where d_o is the outside diameter of the tubular member.

3.6.3 Compression

This Clause applies to members in which the resultant of all design loads and design bending moments acting on the member is equivalent to a single force in the direction of the member axis passing through the centroid of the section.

The design axial load (N^*) shall satisfy—

$$N^* \le \phi_c N_c$$

where

$N_c = f_n A_e$ . . . 3.6.3(1)

f_n = critical stress and shall be calculated from Equation 3.6.3(2) or Equation 3.6.3(3), as appropriate

$= \left(0.658^{\lambda_c^2}\right) f_y$ for $\lambda_c \le 1.5$ . . . 3.6.3(2)

$= \left(\frac{0.877}{\lambda_c^2}\right) f_y$ for $\lambda_c > 1.5$ . . . 3.6.3(3)

λ_c = slenderness factor

$= \sqrt{\frac{f_y}{f_{oc}}}$ . . . 3.6.3(4)

f_{oc} = elastic flexural buckling stress determined in accordance with Clause 3.4.1

A_e = effective area at the critical stress (f_n)

$= A_o + R(A - A_o)$ . . . 3.6.3(5)

A_o = reduced area due to local buckling

$= \left[\left(\frac{0.037}{d_o f_y / tE}\right) + 0.667\right] A \le A$ for $\frac{d_o}{t} \le 0.441\left(\frac{E}{f_y}\right)$ . . . 3.6.3(6)

R = reduction factor

$= \frac{f_y}{2f_{oc}} \le 1.0$ . . . 3.6.3(7)

A = area of the full, unreduced cross-section

Accessed by UNIVERSITY OF SOUTH AUSTRALIA on 03 May 2019 (Document currency not guaranteed when printed)

COPYRIGHT

3.6.4 Combined bending and compression

Combined bending and compression shall be in accordance with Clause 3.5.

3.7 COMBINED BENDING AND TORSIONAL LOADING

For torsionally unrestrained flexural members subject to both bending and torsional loading, the nominal section moment capacity calculated in accordance with Clause 3.3.2.2 shall be multiplied by a reduction factor (R).

As specified in Equation 3.7, the reduction factor (R), shall be equal to the ratio of the maximum normal stresses due to bending alone divided by the combined stresses due to both bending and torsional warping at the point of maximum combined stress on the cross-section. Equation 3.7 is limited to singly- or doubly-symmetric sections subject to bending about an axis of symmetry and not subject to biaxial bending. The torsional effect for other cross-sections shall be determined using rational engineering analysis.

$$R = \frac{\left(f_{\text{bending_max.}}\right)}{\left(f_{\text{bending}} + f_{\text{torsion}}\right)} \leq 1.0 \qquad \ldots 3.7$$

where

$f_{\text{bending_max.}}$ = bending stress at extreme fibre taken on the same side of the neutral axis as f_{bending}

f_{bending} = bending stress at location in cross-section where combined bending and torsion stress is maximum

f_{torsion} = torsional stress at location in cross-section where combined bending and torsion stress effect is maximum

Stresses shall be calculated using full unreduced section properties. For C-Sections with edge-stiffened flanges, if the maximum combined stresses occur at the junction of web and flange, the R factor may be increased by 15 percent, but shall be not greater than 1.0.

Accessed by UNIVERSITY OF SOUTH AUSTRALIA on 03 May 2019 (Document currency not guaranteed when printed)

COPYRIGHT

SECTION 4 STRUCTURAL ASSEMBLIES

4.1 BUILT-UP SECTIONS

4.1.1 Flexural members composed of two channels

The maximum longitudinal spacing of welds or other connectors ($s_{max.}$) joining two channels to form an I-section shall be determined as follows:

$$s_{max.} = \frac{l}{6} \leq \frac{2s_g N^*}{mq} \qquad \text{. . . 4.1.1(1)}$$

where

l = span of beam

s_g = vertical distance between two rows of connections nearest to the top and bottom flanges

N^* = design tensile force of the connection

q = intensity of the design action on the beam

m = distance from the shear centre of one channel to the mid-plane of its web (see Table E1 of Appendix E)

The intensity of the design load (q) shall be obtained by dividing the magnitude of the design concentrated actions or reactions by the length of bearing. For beams designed for a uniformly distributed load, q shall be equal to three times the intensity of the uniformly distributed design action. If the length of bearing of a concentrated action or reaction is less than the weld spacing (s_w), the design tensile force of the welds or connections closest to the load or reaction shall be determined as follows:

$$N^* = \frac{mR_b^*}{2s_g} \qquad \text{. . . 4.1.1(2)}$$

where R_b^* is the design concentrated action or reaction.

The maximum spacing of connections ($s_{max.}$) depends upon the intensity of the action applied directly at the connection. Therefore, if uniform spacing of connections is used over the whole length of the beam, it shall be determined at the point of maximum local load intensity. In cases where this procedure may result in uneconomically close spacing, either of the following methods may be adopted:

(a) The connection spacing may be varied along the beam in accordance with the variation of the load intensity.

(b) The reinforcing cover plates may be welded to the flanges at points where concentrated loads occur. The design shear force of the connections joining these plates to the flanges shall then be used for N^*, and s_g shall be taken as the depth of the beam.

Accessed by UNIVERSITY OF SOUTH AUSTRALIA on 03 May 2019 (Document currency not guaranteed when printed)

COPYRIGHT

4.1.2 Compression members composed of two sections in contact

For compression members composed of two sections in contact, the nominal compression capacity shall be determined in accordance with Clause 3.4 subject to the following modification. If the buckling mode involves relative deformations that produce shear forces in the connectors between individual shapes, (l_e/r) is replaced by $(l_e/r)_m$ calculated as follows:

$$\left(\frac{l_e}{r}\right)_m = \sqrt{\left(\frac{l_e}{r}\right)_o^2 + \left(\frac{s}{r_{min}}\right)^2} \qquad \ldots 4.1.2$$

where

$(l_e/r)_o$ = overall slenderness ratio of entire section about built-up member axis

s = intermediate fastener or spot weld spacing

r_{min} = minimum radius of gyration of full unreduced cross-section area of an individual shape in a built-up member

In addition, the fastener capacity and spacing shall satisfy the following:

(a) The intermediate fastener or spot weld spacing, (s), is limited such that (s/r_{min}) does not exceed one half the governing slenderness ratio of the built-up member.

(b) The ends of a built up compression member are connected by a weld having a length not less than the maximum width of the member or by connectors spaced longitudinally not more than 4 diameters apart for a distance equal to 1.5 times the maximum width of the member.

(c) The intermediate fastener(s) or weld(s) at any longitudinal member tie location are capable of transmitting the required capacity in any direction of 2.5 percent of the available axial capacity of the built-up member.

4.1.3 Cover plates, sheets or non-integral stiffeners in compression

The spacing (s) in the line of stress of welds, bolts or rivets connecting a cover plate, sheet, or a non-integral stiffener in compression to another element shall not exceed—

(a) that which is required to transmit the shear between the connected parts on the basis of the design shear force per connection specified in this Clause;

(b) $1.16t\sqrt{\left(\frac{E}{f_c}\right)}$, where t is the thickness of the cover plate or sheet, and f_c is the stress at unfactored load in the cover plate or sheet; and

(c) three times the flat width (b) of the narrowest unstiffened compression element in that portion of the cover plate or sheet that is tributary to the connections, but not less than $1.11t\sqrt{\left(\frac{E}{f_y}\right)}$ if $\frac{b}{t} < 0.50\sqrt{\left(\frac{E}{f_y}\right)}$, or $1.33t\sqrt{\left(\frac{E}{f_y}\right)}$ if $\frac{b}{t} \geq 0.50\sqrt{\left(\frac{E}{f_y}\right)}$ unless closer spacing is required by Item (a) or (b).

In the case of intermittent fillet welds parallel to the direction of stress, the spacing shall be taken as the clear distance between welds plus 12 mm. In all other cases, the spacing shall be taken as the centre-to-centre distance between connections.

This Clause does not apply to cover sheets that act only as sheeting material and shall not be considered as load-carrying elements.

Accessed by UNIVERSITY OF SOUTH AUSTRALIA on 03 May 2019 (Document currency not guaranteed when printed)

COPYRIGHT

4.2 MIXED SYSTEMS

The design of members in mixed systems using cold-formed steel components in conjunction with other materials shall conform to this Standard and to the relevant material Standard.

4.3 LATERAL RESTRAINTS

4.3.1 General

Lateral restraints required to restrain lateral bending or twisting of a loaded beam or column shall be in accordance with Clauses 4.3.2 and 4.3.3. Local buckling at the points of attachment of the restraints shall be avoided.

4.3.2 Symmetrical beams and columns

4.3.2.1 *General*

Restraints and restraining systems, including connections, shall be designed in accordance with the strength and stiffness requirements of this Clause 4.3.2.

4.3.2.2 *Restraint against lateral deflection*

The lateral restraint at any cross-section of the member being restrained shall be designed to transfer a force acting at the critical flange equal to 0.025 times the maximum force in the critical flanges of the adjacent segments or sub-segments, except where the restraints are more closely spaced than is required to ensure that $M^* = \phi_b M_b$.

If the restraints are more closely spaced, then the restraint may be designed for a lesser force. The actual arrangement of restraints shall be assumed to be equivalent to a set of restraints that will ensure that $M^* = \phi_b M_b$. Each equivalent restraint shall correspond to an appropriate group of actual restraints. This group shall then be designed as a whole to transfer the force of 0.025 times the maximum force in the critical flanges of the equivalent adjacent segments or sub-segments.

4.3.2.3 *Restraint against twist rotation*

A torsional restraint at a cross-section of the member being restrained will be effective restraint against twist rotation if it is designed to transfer a force equal to 0.025 times the maximum force in the critical flange from any unrestrained flange to the lateral restraint.

4.3.2.4 *Parallel restrained members*

If a series of parallel members is restrained by a line of restraints, each restraining element shall be designed to transfer a force equal to the sum of 0.025 times the flange force from the connected member and 0.0125 times the sum of the flange forces in the connected members beyond, except that no more than seven members need be considered.

4.3.2.5 *Restraint against lateral rotation*

A rotational restraint at a cross-section of the member being restrained shall provide restraint against lateral rotation out of the plane of bending, provided its flexural stiffness in the plane of rotation is comparable with the corresponding stiffness of the restrained member.

4.3.3 Channel- and Z-section beams

4.3.3.1 *General*

The requirements for bracing to restrain twisting of channel- and Z-sections used as beams and loaded in the plane of the web, apply only if—

(a) the top flange is connected to the deck or sheeting material in accordance with Clauses 4.3.3.2 so as to effectively restrain lateral deflection of the connected flange; or

Accessed by UNIVERSITY OF SOUTH AUSTRALIA on 03 May 2019 (Document currency not guaranteed when printed)

COPYRIGHT

(b) neither flange is connected in accordance with Clauses 4.3.3.3.

If both flanges are connected, further bracing is not required.

4.3.3.2 *One flange connected to sheeting and subjected to wind uplift*

Channel- and Z-sections, used to support attached covering material and loaded in a plane parallel to the web, shall be designed taking into account the restraining effects of covering materials and fasteners. Provisions shall be made for the forces, from each beam, that accumulate in the covering material. These forces shall be transferred from the covering material to a member or assembly of sufficient strength and stiffness to resist these forces.

NOTE: This may be achieved by one of the following means:

(a) A system of bridging or bracing members sufficiently strong to carry the forces to a stiff member.

(b) Arranging equally loaded alternating members to oppose each other.

(c) A diaphragm with sufficient rigidity to transfer the forces to a stiff perimeter member, coupled with devices (e.g. cleats), which restrain rotation of the beams at their supports.

(d) Direct axial stress in the roof sheets. The forces in this case may be taken out at the roof where equal and opposite forces meet.

(e) Other designs in which the forces might be transferred to stiff members at the eaves, such as the eaves struts in a shed roof.

For beam systems that satisfy the cleat and screw-fastening requirements of Clause 3.3.3.4, Items (ix) to (xiv), the bracing does not need to be connected to a stiff member but shall be capable of preventing torsional deformation of the beam at the point of attachment.

4.3.3.3 *Neither flange connected to sheeting or connected to sheeting with concealed fasteners*

Each intermediate brace, at the top and bottom flanges of C- and Z-section members shall be designed with resistance N_{L1} and N_{L2} where N_{L1} is the brace force required on the flange in the quadrant with both x- and y-axes positive, and N_{L2} is the brace force on the other flange. The x-axis shall be designated as the centroidal axis perpendicular to the web and the y-axis shall be designated as the centroidal axis parallel to the web. The x and y coordinates shall be oriented such that one of the flanges is located in the quadrant with both positive x- and y-axes.

NOTE: See Figure 4.3.3.3 for illustrations of co-ordinate systems and positive force directions.

(a) For uniformly distributed loads:

$$N_{L1} = 1.5[W_y k' - (\frac{W_x}{2}) + (\frac{M_z}{d})] \qquad \text{. . . 4.3.3.3(1)}$$

$$N_{L2} = 1.5[W_y k' - (\frac{W_x}{2}) - (\frac{M_z}{d})] \qquad \text{. . . 4.3.3.3(2)}$$

When the uniform load acts through the plane of the web, i.e. $W_y = W$

$$N_{L1} = -N_{L2} = 1.5[\frac{m}{d}]W \quad \text{for C-sections} \qquad \text{. . . 4.3.3.3(3)}$$

$$N_{L1} = N_{L2} = 1.5[\frac{I_{xy}}{2I_x}]W \quad \text{for Z-sections} \qquad \text{. . . 4.3.3.3(4)}$$

where

W_x, W_y = components of design load (W) parallel to the x- and y-axes respectively. W_x and W_y are positive if pointing to the positive x- and y-directions respectively

Accessed by UNIVERSITY OF SOUTH AUSTRALIA on 03 May 2019 (Document currency not guaranteed when printed)

COPYRIGHT

W = design load determined in accordance with the most critical load combination within a distance of $0.5a$ each side of the brace

where

a = longitudinal distance between centre-lines of braces

k' = 0 for C-sections

$$= \frac{I_{xy}}{(2I_x)} \text{ for Z-sections} \qquad \ldots 4.3.3.3(5)$$

where

I_{xy} = product of second moment of area of full unreduced sections

I_x = second moment of area of full section about x-axis

M_z = $-W_x e_{sy} + W_y e_{sx}$, torsional moment of W about shear centre

where

e_{sx}, e_{sy} = eccentricities of load components measured from the shear centre and in the x- and y-directions

d = depth of section

m = distance from shear centre to mid-plane of web of C-section

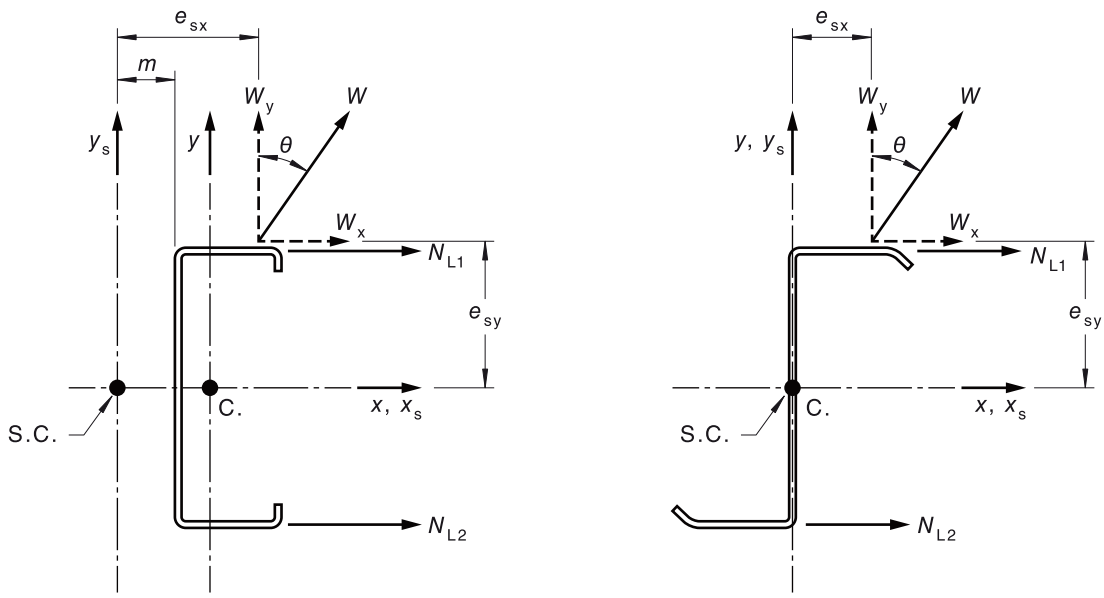

FIGURE 4.3.3.3 COORDINATE SYSTEMS AND POSITIVE FORCE DIRECTIONS

(b) For concentrated loads:

$$N_{L1} = [P_y k' - (\frac{P_x}{2}) + (\frac{M_z}{d})] \qquad \ldots 4.3.3.3(6)$$

$$N_{L2} = [P_y k' - (\frac{P_x}{2}) - (\frac{M_z}{d})] \qquad \ldots 4.3.3.3(7)$$

When the design load acts through the plane of the web, i.e. $P_y = P$

Accessed by UNIVERSITY OF SOUTH AUSTRALIA on 03 May 2019 (Document currency not guaranteed when printed)

COPYRIGHT

$$N_{L1} = -N_{L2} = [\frac{m}{d}]P \quad \text{for C-sections} \qquad \ldots 4.3.3.3(8)$$

$$N_{L1} = N_{L2} = [\frac{I_{xy}}{2I_x}]P \quad \text{for Z-sections} \qquad \ldots 4.3.3.3(9)$$

where

P_x, P_y = components of design load (P) parallel to the x- and y-axes respectively. P_x and P_y are positive if pointing to the positive x- and y-directions respectively

M_z = $-P_x e_{sy} + P_y e_{sx}$, torsional moment of P about shear centre

P = design concentrated load within a distance of $0.3a$ on each side of the brace, plus $1.4(1 - l/a)$ times each design concentrated load located farther than $0.3a$ but not farther than $1.0a$ from the brace. The design concentrated load is the applied load determined in accordance with the most critical load combinations

where

l = distance from concentrated load to the brace

The bracing force N_{L1} or N_{L2} is positive where restraint is required to prevent the movement of the corresponding flange in the negative x-direction.

Braces shall be designed to avoid local buckling at the points of attachment to the member.

Braces shall be attached in such a manner as to prevent lateral deflection of either flange in either direction at intermediate braces. If one-third or more of the total design load on the beam is concentrated over a length of one-twelfth or less of the span of the beam, an additional brace shall be placed at or near the centre of this loaded length.

Other braces are not required if all loads and reactions on a beam are transmitted through members that frame into the section in such a manner as to effectively restrain the section against rotation and lateral displacement.

4.4 WALL STUDS AND WALL STUD ASSEMBLIES

The design capacity of a stud may be calculated in accordance with Section 3 or 7 (neglecting sheeting and using steel only) or on the basis that sheeting (attached to one or both sides of the stud) produces lateral and rotational support to the stud in the plane of the wall, provided that the stud, sheeting, and attachments conform to the following:

(a) Both ends of the stud shall be braced to restrain rotation about the longitudinal stud axis and horizontal displacement perpendicular to the stud axis. However, the ends may or may not be free to rotate about both axes perpendicular to the stud axis. The sheeting shall be connected to the top and bottom members of the wall assembly to enhance the restraint provided to the stud and stabilize the overall assembly.

If intermediate braces such as noggings (dwangs) are used for stability at points along the wall stud for systems either with or without sheeting, they shall be connected to the stud so as to resist lateral and torsional deformation of the stud at the points of connection.

(b) If sheeting is used for stability of the wall studs, the sheeting shall retain its capacity and stiffness for the expected service life of the wall and additional bracing shall be provided for the required structural integrity during construction and in the completed structure.

Accessed by UNIVERSITY OF SOUTH AUSTRALIA on 03 May 2019 (Document currency not guaranteed when printed)

COPYRIGHT

SECTION 5 CONNECTIONS

5.1 GENERAL

Connection elements consist of members, connection components (cleats, gusset plates, brackets, connecting plates) and connectors (welds, bolts, screws, rivets, clinches, nails, adhesives).

The connections in a structure shall be proportioned so as to be consistent with the assumptions made in the analysis of the structure and to conform to this Section. Connections shall be capable of transmitting the design action effects [design action] calculated from this analysis.

NOTES:

1 Any suitable fastening system, such as welding, bolting, screwing, riveting, clinching, nailing, structural adhesive or other mechanical means, may be used to join component parts.

2 Design capacities of specific connections may be obtained by prototype testing in accordance with Section 8.

5.2 WELDED CONNECTIONS

5.2.1 General

This Clause applies to welded connections for cold-formed steel structural members in which the weld is produced by the arc welding or resistance welding processes.

Arc-welded connections, where at least one of the connected parts is less than 3 mm thick, or less than 2.5 mm thick for fillet welds, shall be in accordance with AS/NZS 1554.7. The arc weld design capacities shall be determined in accordance with Clauses 5.2.2 to 5.2.6, as appropriate.

Arc-welded connections, where each connected part is greater than or equal to 3 mm thick, or greater than or equal to 2.5 mm thick for fillet welds, shall be in accordance with AS/NZS 1554.1 or AS/NZS 1554.2, as appropriate. The arc weld design capacities shall be determined in accordance with AS 4100 or NZS 3404, as appropriate.

Resistance welds shall be in accordance with AWS C1.1 or AWS C1.3, as appropriate. The resistance weld design capacities shall be determined in accordance with Clause 5.2.7.

NOTES:

1 For high-strength cold-rolled steel, reference should be made to Clause 1.5.1.4 for design strength reduction near welds.

2 AS/NZS 1554.1 requires designers to specify the required weld category, these being either GP (general purpose) or SP (structural purpose), and any associated non-destructive examination requirements.

5.2.2 Butt welds

5.2.2.1 *Tension or compression*

The design tensile or compressive force normal to the area of a butt weld shall satisfy—

$$N_w^* \leq \phi N_w \qquad \text{. . . 5.2.2.1(1)}$$

where

ϕ = capacity reduction factor of a butt weld in tension or compression (see Table 1.6.3)

N_w = nominal tensile or compressive capacity of a butt weld

Accessed by UNIVERSITY OF SOUTH AUSTRALIA on 03 May 2019 (Document currency not guaranteed when printed)

COPYRIGHT

The nominal tensile or compressive capacity of a butt weld, welded from one or both sides, shall be determined as follows:

$$N_w = l_w t_t f_y \quad \text{. . . 5.2.2.1(2)}$$

where

l_w = length of the full size of the weld

t_t = design throat thickness of a butt weld as defined in AS/NZS 1554.1

f_y = yield stress used in design for the lower strength base steel

5.2.2.2 *Shear*

The design shear force $\left(V_w^*\right)$ on a butt weld shall satisfy—

$$V_w^* \le \phi V_w \quad \text{. . . 5.2.2.2(1)}$$

where

ϕ = capacity reduction factor of a butt weld in shear (see Table 1.6.3)

V_w = nominal shear capacity of a butt weld

The design shear capacity $\left(\phi V_w\right)$ of a butt weld shall be the lesser of the following:

(a) $\phi = 0.80$

$$V_w = l_w t_t \left(0.6 f_{uw}\right)$$

(b) $\phi = 0.90$ . . . 5.2.2.2(2)

$$V_w = l_w t_t \left(\frac{f_y}{\sqrt{3}}\right) \quad \text{. . . 5.2.2.2(3)}$$

where f_{uw} is the nominal tensile strength of the weld metal.

5.2.3 Fillet welds

5.2.3.1 *General*

A fillet weld subject to a design shear force $\left(V_w^*\right)$ shall satisfy—

$$V_w^* \le \phi V_w \quad \text{. . . 5.2.3.1}$$

where

ϕ = capacity reduction factor of a fillet weld (see Table 1.6.3)

V_w = nominal shear capacity of a fillet weld

The design shear capacity (ϕV_w) of a fillet weld shall satisfy Clauses 5.2.3.2, 5.2.3.3 and 5.2.3.4.

Accessed by UNIVERSITY OF SOUTH AUSTRALIA on 03 May 2019 (Document currency not guaranteed when printed)

COPYRIGHT

5.2.3.2 *Longitudinal loading*

For longitudinal loading, ϕV_w shall be determined as follows from the lesser of Items (a)(i) and (b)(i), or the lesser of Items (a)(ii) and (b)(ii), as applicable, as follows:

(a) (i) For $\frac{l_w}{t_1} < 25$:

$\phi = 0.60$

$$V_w = \left[1 - \frac{0.01 l_w}{t_1}\right] t_1 l_w f_{u1} \quad \text{. . . 5.2.3.2(1)}$$

(ii) For $\frac{l_w}{t_2} < 25$:

$\phi = 0.60$

$$V_w = \left[1 - \frac{0.01 l_w}{t_2}\right] t_2 l_w f_{u2} \quad \text{. . . 5.2.3.2(2)}$$

(b) (i) For $\frac{l_w}{t_1} \geq 25$:

$\phi = 0.55$

$$V_w = 0.75 t_1 l_w f_{u1} \quad \text{. . . 5.2.3.2(3)}$$

(ii) For $\frac{l_w}{t_2} \geq 25$:

$\phi = 0.55$

$$V_w = 0.75 t_2 l_w f_{u2} \quad \text{. . . 5.2.3.2(4)}$$

For Grade G450 steel specified in AS 1397, the capacity factor of 0.55 shall be used throughout Clause 5.2.3.2.

5.2.3.3 *Transverse loading*

For transverse loading, ϕV_w shall be determined as follows:

ϕ = 0.60

V_w = $t_1 l_w f_{u1}$: *or* . . . 5.2.3.3(1)

= $t_2 l_w f_{u2}$ . . . 5.2.3.3(2)

whichever is the lesser

where

t_1, t_2 = thickness of the two connecting plates of the tensile strengths f_{u1} and f_{u2}, respectively [see Figures 5.2.3(a) and (b)]

l_w = length of fillet weld

f_{u1}, f_{u2} = tensile strength used in the design of the two connecting plates of the thicknesses t_1 and t_2, respectively

Where inclination failure can occur, a reduced capacity factor of 0.55 shall be used.

Accessed by UNIVERSITY OF SOUTH AUSTRALIA on 03 May 2019 (Document currency not guaranteed when printed)

COPYRIGHT

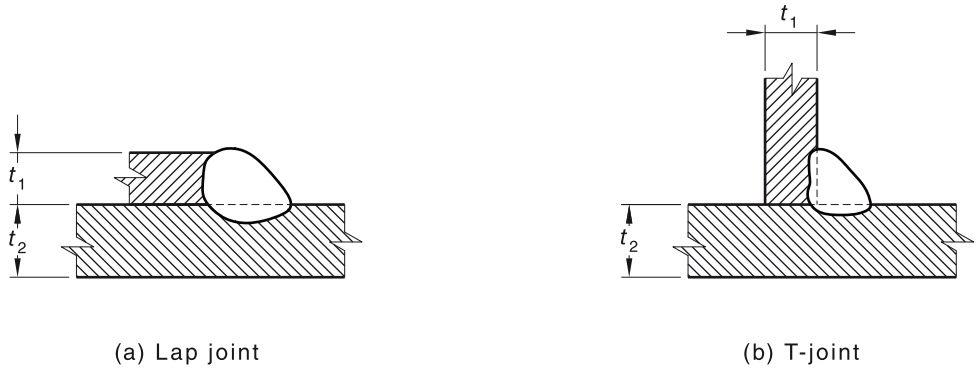

FIGURE 5.2.3 FILLET WELDS

5.2.3.4 *Longitudinal and transverse loading*

For longitudinal and transverse loading, or both, ϕV_w shall be determined as follows:

For t $\geq$ 2.5 mm

ϕ = 0.60

$V_w = 0.75 t_t\, l_w\, f_{uw}$ . . . 5.2.3.4(1)

where

t_t = design throat thickness of the weld (see Figure 5.2.3)

= $0.707 t_{w1}$ or $0.707 t_{w2}$, whichever is the smaller . . . 5.2.3.4(2)

t_{w1}, t_{w2} = leg lengths of fillet weld

l_w = length of fillet weld

f_{uw} = nominal tensile strength of weld metal

A larger design throat thickness than those calculated using Equation 5.2.3.4(2) shall be permitted if measurement shows that the welding procedure used consistently yields the larger value.

5.2.4 Arc spot welds (puddle welds)

5.2.4.1 *General*

Arc spot welds [see Figure 5.2.4(A)] apply to welding sheet steel to thicker supporting members in the flat position or sheet to sheet in the flat position. Arc spot welds shall not be made on steel where the thinnest connected part is greater than 3 mm thick, nor through a combination of steel sheets having a total thickness greater than 3 mm.

Weld washers [see Figure 5.2.4(B)] shall be used if the thickness of the sheet is less than 0.7 mm. Weld washers shall have a thickness between 1.3 and 2.0 mm with a minimum pre-punched hole of 10 mm diameter.

Sheet to sheet welds do not require weld washers.

Arc spot welds shall be specified by the minimum effective diameter of the fused area (d_e) [see Figure 5.2.4(A)]. The minimum effective diameter shall be 10 mm.

Accessed by UNIVERSITY OF SOUTH AUSTRALIA on 03 May 2019 (Document currency not guaranteed when printed)

COPYRIGHT

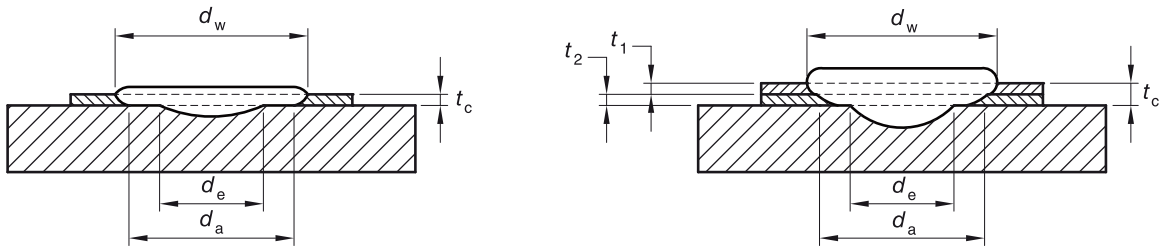

(a) Single thickness of sheet

(b) Double thickness of sheet

FIGURE 5.2.4(A) ARC SPOT WELDS

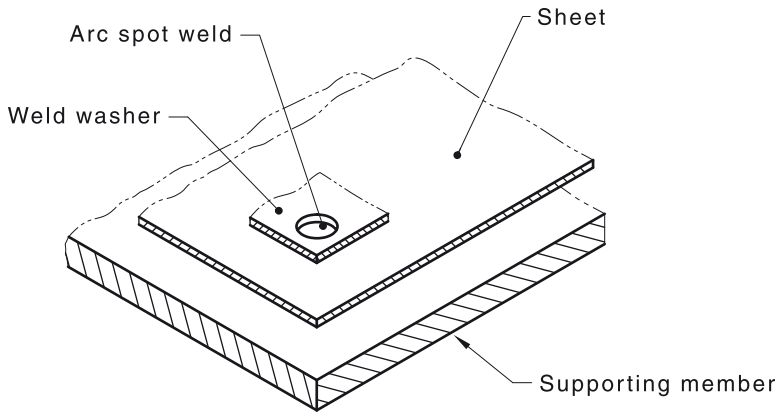

(a) Typical weld washer

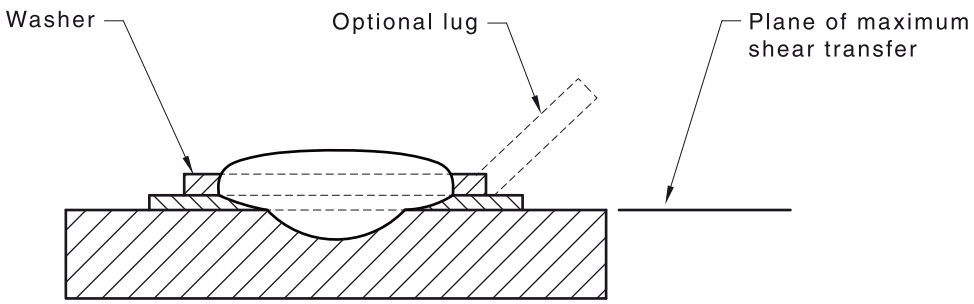

(b) Arc spot weld using washer

FIGURE 5.2.4(B) WELD WASHER FOR ARC SPOT WELDS

Accessed by UNIVERSITY OF SOUTH AUSTRALIA on 03 May 2019 (Document currency not guaranteed when printed)

5.2.4.2 *Shear*

The design shear force $\left(V_w^*\right)$ on an arc spot weld shall satisfy—

$$V_w^* \le \phi V_w \qquad \text{. . . 5.2.4.2(1)}$$

where

ϕ = capacity reduction factor of an arc spot weld in shear (see Table 1.6.3)

V_w = nominal shear capacity of an arc spot weld

The design shear capacity (ϕV_w) of each arc spot weld between sheet or sheets, and supporting member shall be the lesser of Item (a) and whichever is applicable of Items (b)(i), (ii) and (iii), as follows:

(a) $\phi = 0.60$

$$V_w = 0.589 d_e^2 f_{uw} \qquad \text{. . . 5.2.4.2(2)}$$

(b) (i) For $\dfrac{d_a}{t_c} \le 0.815\sqrt{\dfrac{E}{f_u}}$:

$\phi = 0.60$

$$V_w = 2.20 t_c d_a f_u \qquad \text{. . . 5.2.4.2(3)}$$

(ii) For $0.815\sqrt{\dfrac{E}{f_u}} < \left(\dfrac{d_a}{t_c}\right) < 1.397\sqrt{\dfrac{E}{f_u}}$:

$\phi = 0.50$

$$V_w = 0.280\left[1 + 5.59\frac{\sqrt{\dfrac{E}{f_u}}}{\dfrac{d_a}{t_c}}\right] t_c d_a f_u \qquad \text{. . . 5.2.4.2(4)}$$

(iii) For $\dfrac{d_a}{t_c} \ge 1.397\sqrt{\dfrac{E}{f_u}}$:

$\phi = 0.50$

$$V_w = 1.40 t_c d_a f_u \qquad \text{. . . 5.2.4.2(5)}$$

where

d_e = effective diameter of fused area (see Figure 5.2.4(A))

$$= (0.7 d_w - 1.5 t_c) \le 0.55 d_w \qquad \text{. . . 5.2.4.2(6)}$$

d_w = visible diameter of outer surface of arc spot weld

E = Young's modulus of elasticity (200×10^3 MPa)

Accessed by UNIVERSITY OF SOUTH AUSTRALIA on 03 May 2019 (Document currency not guaranteed when printed)

COPYRIGHT

d_a = average diameter of an arc spot weld at mid-thickness of t_c [see Figure 5.2.4(A)]

($d_w - t_c$) for a single sheet . . . 5.2.4.2(7)

($d_w - 2\ t_c$) for multiple sheets . . . 5.2.4.2(8)

(not more than four lapped sheets over a supporting member)

t_c = total combined base steel thickness of sheets (exclusive of coatings) involved in shear transfer above the plane of maximum shear transfer [see Figure 5.2.4(B)(b)]

NOTE: If it can be shown by measurement that a given weld procedure will consistently give a larger effective diameter (d_e) or average diameter (d_a), as applicable, this larger diameter may be used provided the particular welding procedure used for making those welds is followed.

5.2.4.3 *Tearout*

A connected part shall have a spacing between arc spot welds and an edge distance (e) from an arc spot weld such that the design shear force $\left(V_w^*\right)$ transmitted by the weld satisfies—

$$V_w^* \leq \phi V_w \qquad \text{. . . 5.2.4.3(1)}$$

where

ϕ = capacity reduction factor of the connected part of an arc spot weld in shear (see Table 1.6.3)

= $0.70 \text{ for } \dfrac{f_u}{f_y} \geq 1.05$

= $0.60 \text{ for } \dfrac{f_u}{f_y} < 1.05$

V_w = nominal shear force transmitted by the weld

= tef_u . . . 5.2.4.3(2)

t = thickness of the thinnest connected sheet

e = edge distance measured in the line of the force from centre-line of an arc spot weld to the nearest edge of an adjacent weld or to the end of the connected part toward which the force is directed [see Figures 5.2.4(C)(a) and (b)]

In addition, the edge distance (e) from the centre-line of any weld to the end or boundary of the connected member shall be not less than $1.5d_w$. In no case shall the clear distance of welds and the end of member be less than $1.0d_w$.

Accessed by UNIVERSITY OF SOUTH AUSTRALIA on 03 May 2019 (Document currency not guaranteed when printed)

COPYRIGHT

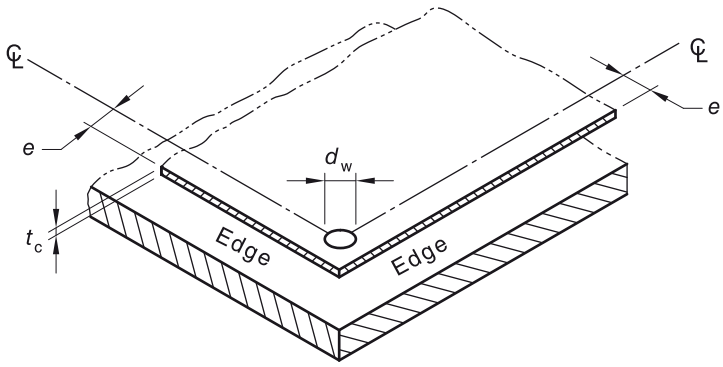

(a) Single sheet

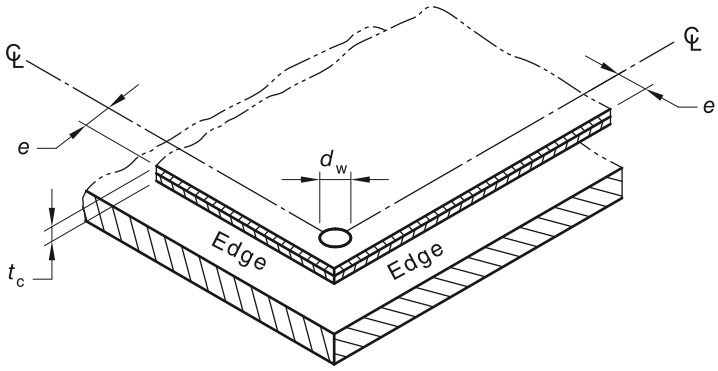

(b) Double sheet

FIGURE 5.2.4(C) EDGE DISTANCE FOR ARC SPOT WELDS

5.2.4.4 *Tension*

The design tensile force $\left(N_w^*\right)$ on an arc spot weld shall satisfy—

$$N_w^* \leq \phi N_w \qquad \text{. . . 5.2.4.4(1)}$$

The design tensile capacity (ϕN_w) of each arc spot weld between sheet and supporting member shall be determined as follows:

ϕ = 0.65

N_w = nominal tensile capacity of an arc spot weld

$$= 0.7 t d_a f_u \qquad \text{. . . 5.2.4.4(2)}$$

The following additional limitations for use in Equation 5.2.4.3(2) shall apply:

$e \geq d_w$

$f_{uw} \geq$ 410 MPa

$f_u \leq$ 410 MPa

$t \leq$ 0.7 mm

NOTE: If it can be shown by measurement that a given weld procedure will consistently give a larger average diameter (d_a), this larger diameter may be used provided the particular welding procedure used for making those welds is followed.

Accessed by UNIVERSITY OF SOUTH AUSTRALIA on 03 May 2019 (Document currency not guaranteed when printed)

COPYRIGHT

The effects of any eccentric loading on an arc spot weld subject to uplift tension load, e.g., an arc spot weld on the perimeter of a roof or floor system, shall be evaluated and considered within the design of the weld.

5.2.5 Arc seam welds

5.2.5.1 *General*

Arc seam welds (see Figure 5.2.5.1) apply only to the following connections:

(a) Sheet to thicker supporting member welded in the flat position.

(b) Sheet to sheet welded in the horizontal or flat position.

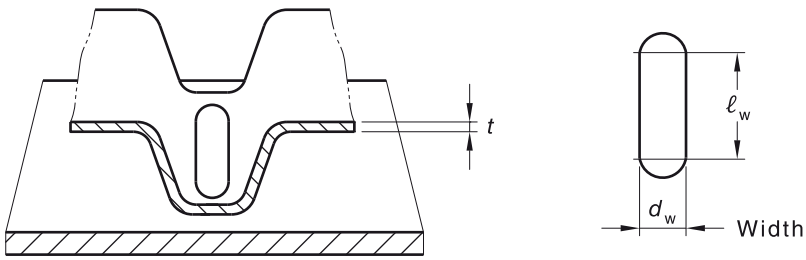

FIGURE 5.2.5.1 ARC SEAM WELD—SHEET TO SUPPORTING MEMBER IN FLAT POSITION

5.2.5.2 *Shear*

The design shear force $\left(V_n^*\right)$ on an arc seam weld shall satisfy—

$$V_n^* \leq \phi V_w \qquad \text{. . . 5.2.5.2(1)}$$

where

ϕ = capacity reduction factor of an arc seam weld in shear (see Table 1.6.3)

V_w = nominal tensile capacity of an arc spot weld

The design shear capacity (ϕV_w) of an arc seam weld shall be the lesser of the following:

(a) $\phi = 0.60$

$$V_w = \left[\frac{\pi d_e^2}{4} + l_w d_e\right] 0.75 f_{uw} \qquad \text{. . . 5.2.5.2(2)}$$

(b) $\phi = 0.60$

$$V_w = 2.5 t f_u \left(0.25 l_w + 0.96 d_a\right) \qquad \text{. . . 5.2.5.2(3)}$$

where

d_e = effective width of an arc seam weld at fused surfaces

$$= 0.7 d_w - 1.5 t \qquad \text{. . . 5.2.5.2(4)}$$

d_w = width of an arc seam weld

l_w = length of the full size of the weld not including the circular ends.

For calculation purposes, l_w shall not exceed $3d_w$

Accessed by UNIVERSITY OF SOUTH AUSTRALIA on 03 May 2019 (Document currency not guaranteed when printed)

COPYRIGHT

t = thickness of the thinnest connected part

d_a = average width of arc seam weld

= $d_w - t$ (for single sheet) . . . 5.2.5.2(5)

= $d_w - 2t$ (for double sheet) . . . 5.2.5.2(6)

5.2.5.3 *Tearout*

The design tearout capacity (ϕV_w) of the connected part based on the edge distance (e) (see Figure 5.2.5.3) shall be determined as for the arc spot weld specified in Clause 5.2.4.3.

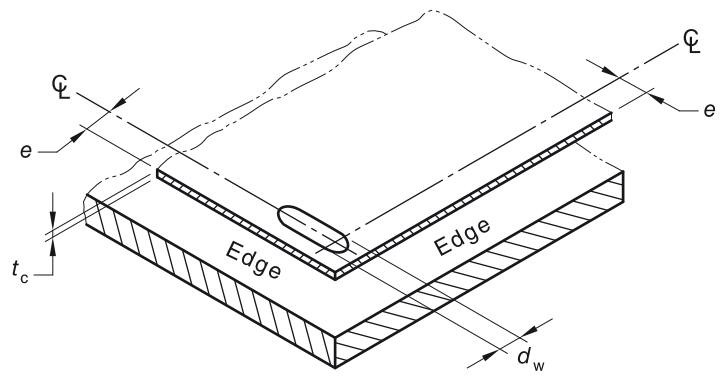

FIGURE 5.2.5.3 EDGE DISTANCE FOR ARC SEAM WELD

5.2.6 Flare welds

5.2.6.1 *General*

Flare welds (see Figure 5.2.6(a), (b) and (c)) apply only to the following connections welded in any position:

(a) Sheet to sheet for flare V-welds.

(b) Sheet to sheet for flare-bevel welds.

(c) Sheet to thicker steel member for flare-bevel welds.

5.2.6.2 *Shear*

The design shear force $\left(V_w^*\right)$ on a flare weld shall satisfy—

$$V_w^* \le \phi V_w \quad \text{. . . 5.2.6.2(1)}$$

where

ϕ = capacity reduction factor of flare welds subject to transverse and longitudinal loading (see Table 1.6.3)

V_w = nominal shear capacity of a flare weld

The design shear capacity $\left(\phi V_w\right)$ of a flare weld shall be the least of the following values:

(a) For flare-bevel welds, subject to transverse loading [see Figure 5.2.6(a)]:

ϕ = 0.55

V_w = $0.833 t l_w f_u$ . . . 5.2.6.2(2)

Accessed by UNIVERSITY OF SOUTH AUSTRALIA on 03 May 2019 (Document currency not guaranteed when printed)

(b) For flare welds, subject to longitudinal loading [see Figure 5.2.6(b), (c), (d), (e), (f) and (g)]:

(i) For $t \leq t_w < 2t$ or if the lip height is less than l_w:

$\phi = 0.55$

$V_w = 0.75 t l_w f_u$ . . . 5.2.6.2(3)

(ii) For $t_w \geq 2t$ and the lip height is greater than or equal to l_w:

$\phi = 0.55$

$V_w = 1.5 t l_w f_u$ . . . 5.2.6.2(4)

(c) For longitudinal and transverse loading:

For $t \geq 2.5$ mm:

$\phi = 0.60$

$V_w = 0.75 t_w l_w f_{uw}$ . . . 5.2.6.2(5)

where

t_w = design throat thickness of the weld (see Figure 5.2.6(d), (e), (f) and (g))

= $(5/16)R$ for flare bevel weld filled flush to the surface . . . 5.2.6.2(6)

= $(1/2)R$ or $(3/8)R$ if $R > 12.0$ mm for flare V-weld filled flush to the surface; or . . . 5.2.6.2(7)

= effective throat thickness of flare weld not filled-flush to surface

= $0.707 w_1$ or $0.707 w_2$, whichever is smaller

R = radius of outside bend surface

Accessed by UNIVERSITY OF SOUTH AUSTRALIA on 03 May 2019 (Document currency not guaranteed when printed)

COPYRIGHT

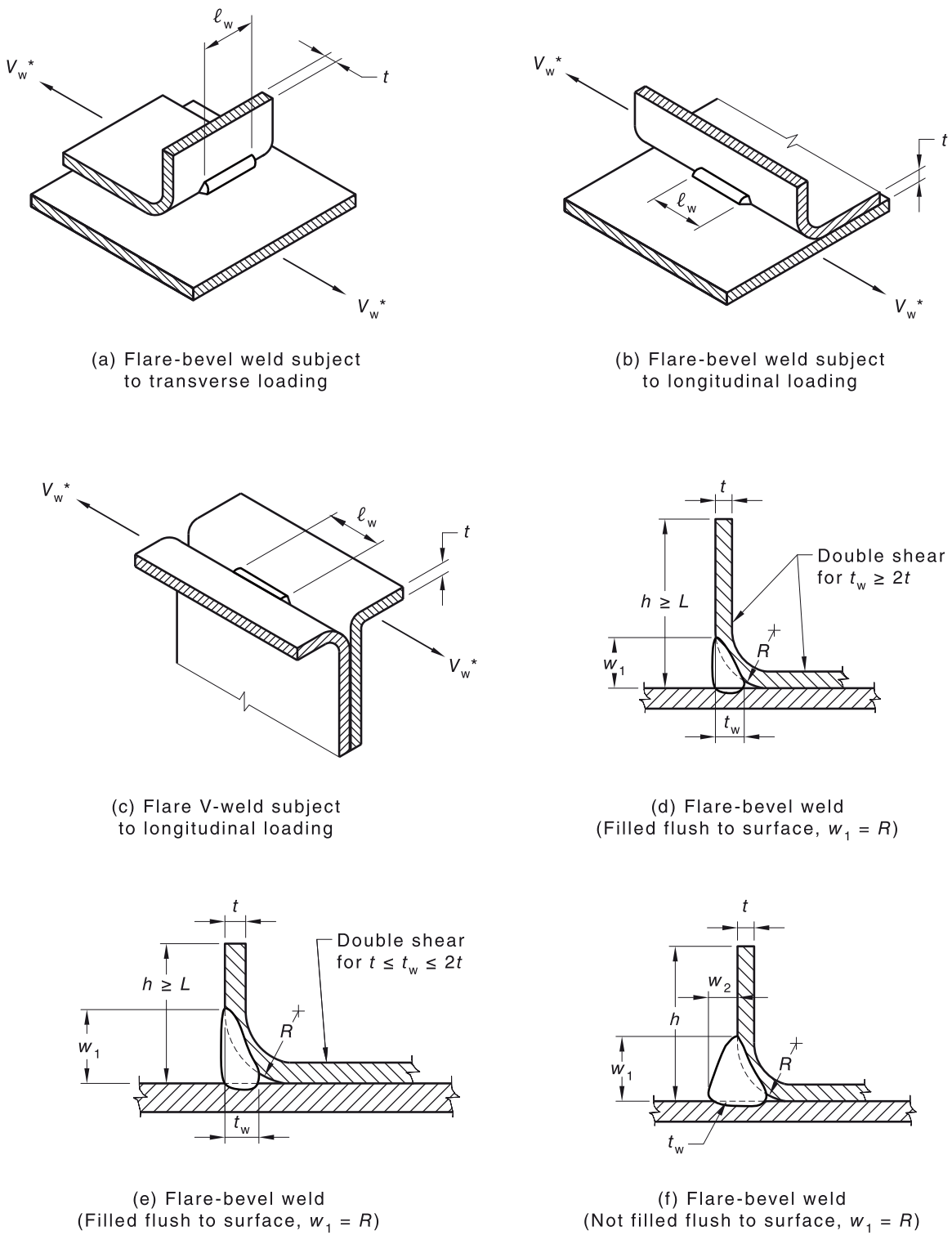

FIGURE 5.2.6 (in part) SHEAR IN FLARE WELDS

Accessed by UNIVERSITY OF SOUTH AUSTRALIA on 03 May 2019 (Document currency not guaranteed when printed)

COPYRIGHT

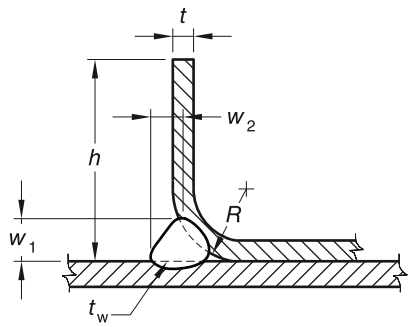

(g) Flare-bevel weld
(Not filled flush to surface, $w_1 = R$)

FIGURE 5.2.6 (in part) SHEAR IN FLARE WELDS

5.2.7 Resistance welds

The design shear force $\left(V_w^*\right)$ on a resistance weld shall satisfy—

$$V_w^* \leq \phi V_w \qquad \text{. . . 5.2.7(1)}$$

where

ϕ = capacity reduction factor of the resistance weld (see Table 1.6.3)

V_w = nominal shear capacity of the resistance weld

The design shear capacity (ϕV_w) shall be determined as follows:

(a) For spot welds, the design shear capacity (ϕV_w) shall be as follows:

$\phi = 0.65$

$V_w = 5.51t^{1.47}$ (kN) for 0.25 mm ≤ t < 3.56 mm . . . 5.2.7(2)

$7.6t + 8.57$ (kN) for 3.56 mm ≤ t < 4.57 mm . . . 5.2.7(3)

t = thickness of thinnest outside sheet, in millimetres

(b) For seam welds, the design shear capacity (ϕV_w) shall be determined by testing in accordance with Section 8.

5.3 BOLTED CONNECTIONS

5.3.1 General

This Clause applies to bolted connections for cold-formed steel structural members in which the thickness of a connected part is less than 3 mm. For bolted connections in which the thickness of a connected part is greater than or equal to 3 mm, AS 4100 or NZS 3404, as appropriate, shall be used.

Bolts shall be installed and tightened to achieve the required performance of the connections involved under service conditions.

Standard holes for bolts shall not exceed the sizes given in Table 5.3.1; except that larger holes may be used in column base details or structural systems connected to concrete provided special plate washers as specified in AS 4100 or NZS 3404 are used.

Oversized and slotted holes given in Table 5.3.1 may be used, provided all bolts are loaded in shear and bolt holes conform to the following:

Accessed by UNIVERSITY OF SOUTH AUSTRALIA on 03 May 2019 (Document currency not guaranteed when printed)

COPYRIGHT

(a) *Slotted holes for Australia* The length of long-slotted holes shall be normal to the direction of the shear hole. Short-slotted holes may have the force either perpendicular or parallel with the hole. Modification factors for the type of bearing connection for oversize and short-slotted holes are given in Table 5.3.4.2(A).

(b) *Purlins and girts for Australia* In situations where lapping or nesting of sections is required, such as purlin and girt applications, it is permissible to have oversized short-slotted holes, provided integral washers are used with the bolt head and nut, all bolts are loaded in shear and the length of slotted holes are normal to the direction of the shear force. The dimension of such oversized-slotted holes shall be—

$(d_f + 6.0)$ mm by $(d_f + 10.0)$ mm

(c) *Z-section purlins and girts for New Zealand* In situations where lapping or nesting is required, such as purlin and girt applications, it is permissible to have short-slotted holes provided all bolts are loaded in shear, washers or backup plates are installed and bolts tightened to achieve the required performance of the connection. The dimension of such short-slotted holes shall be—

$(d_f + 2.0)$ by $(d_f + 10.0)$ mm

Washers and backup plates shall be installed over oversized or short-slotted holes, or long-slotted holes in an outer ply, unless suitable performance is demonstrated by load tests in accordance with Section 8.

In addition, the minimum distance between centres of bolt holes shall provide clearance for bolt heads, nuts, washers and the wrench but shall be not less than 3 times the nominal bolt diameter (d_f). Also, the distance from the centre of any standard hole to the end or other boundary of the connecting member shall be not less than $1.5d_f$.

For oversized and slotted holes, the distance between edges of two adjacent holes and the distance measured from the edge of the hole to the end or other boundary of the connecting member in the line of force shall be not less than $[e - (d_h/2)]$, where e is the distance used in Equation 5.3.2(2), and d_h is the diameter of a hole given in Table 5.3.1. The clear distance between edges of two adjacent holes shall be not less than $2d_f$ and the distance between the edge of the hole and the end of the member shall be not less than d_f.

When holes are staggered, the area to be deducted shall be the greater of—

(i) the deduction for non-staggered holes; or

(ii) the sum of the areas of all holes in any zig-zag line extending progressively across the member or part of the member, less $\left(\frac{s_p^2 t}{4s_g}\right)$ for each gauge space in the chain of holes;

where

s_p = staggered pitch, the distance measured parallel to the direction of the design action in the member, centre-to-centre of holes in consecutive lines [see Figure 5.3.1(A)]

t = thickness of the holed material

s_g = gauge, the distance measured at right angles to the direction of the design action in the member, centre-to-centre of holes in consecutive lines [see Figure 5.3.1(A)]

For sections such as angles with holes in both legs, the gauge shall be taken as the sum of the back marks to each hole, less the leg thickness [see Figure 5.3.1(B)]

Accessed by UNIVERSITY OF SOUTH AUSTRALIA on 03 May 2019 (Document currency not guaranteed when printed)

COPYRIGHT

TABLE 5.3.1

MAXIMUM SIZE OF BOLT HOLES

Nominal bolt diameter (d_f) mm	Standard hole diameter (d_h) mm	Oversized hole diameter (d_h) mm	Short-slotted hole dimensions mm	Long-slotted hole dimensions mm
<12	$d_f + 1.0$	$d_f + 2.0$	$(d_f + 1.0)$ by $(d_f + 6.0)$	$(d_f + 1.0)$ by $2.5d_f$
≥12	$d_f + 2.0$	$d_f + 3.0$	$(d_f + 2.0)$ by $(d_f + 6.0)$	$(d_f + 2.0)$ by $2.5d_f$

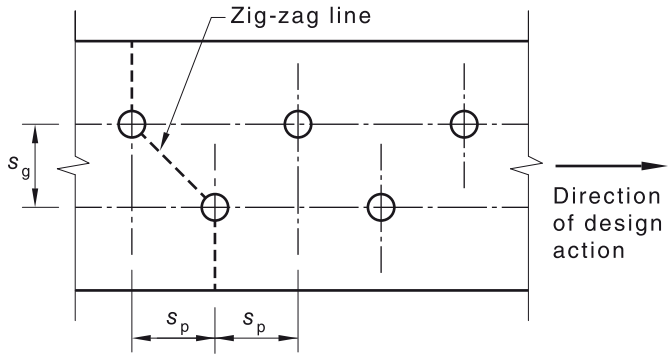

FIGURE 5.3.1(A) STAGGERED HOLES

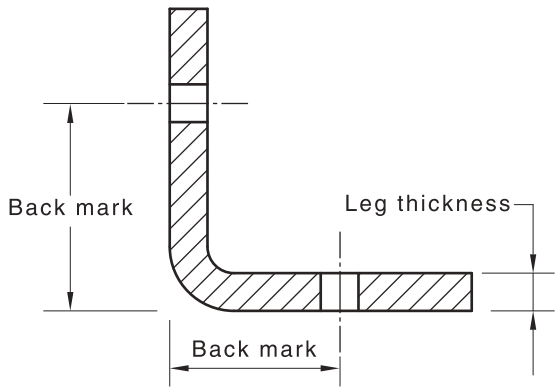

FIGURE 5.3.1(B) ANGLES WITH HOLES IN BOTH LEGS

For bolted connections in shear, the design shear capacity (ϕV_w) is the minimum of the capacities calculated from Clauses 5.3.2 (tearout), 5.3.3 (net section tension), 5.3.4 (bearing), and 5.3.5.1 (bolts in shear).

Accessed by UNIVERSITY OF SOUTH AUSTRALIA on 03 May 2019 (Document currency not guaranteed when printed)

COPYRIGHT

5.3.2 Tearout

A connected part shall have a spacing between bolts and an edge distance from a bolt such that the design shear force $\left(V_f^*\right)$ of the connected part satisfies—

$$V_f^* \le \phi V_f \qquad \text{. . . 5.3.2(1)}$$

where

ϕ = capacity reduction factor of bolted connection subject to tearout (see Table 1.6.3)

= $0.70 \text{ for } \dfrac{f_u}{f_y} \ge 1.05$

= $0.60 \text{ for } \dfrac{f_u}{f_y} < 1.05$

V_f = nominal shear capacity of the connected part along two parallel lines in the direction of the applied force

$$= tef_u \qquad \text{. . . 5.3.2(2)}$$

t = thickness of the connected part

e = distance measured in the line of force from the centre of a standard hole to the nearest edge of an adjacent hole or to the end of the connected part

5.3.3 Net section tension

The design tensile force $\left(N_f^*\right)$ on the net section of the connected part shall satisfy Clause 3.2 and—

$$N_f^* \le \phi N_f \qquad \text{. . . 5.3.3(1)}$$

where

ϕ = capacity reduction factor of bolted connection subject to net section tension (see Table 1.6.3)

N_f = nominal tensile capacity of the net section of the connected part

The design tensile capacity (ϕN_f) of the connected part shall be determined as follows:

$$N_f = \left[0.9 + \left(\frac{0.1d_f}{s_f}\right)\right] A_n f_u \qquad \text{. . . 5.3.3(2)}$$

where

d_f = nominal bolt diameter

s_f = spacing of bolts perpendicular to the line of the force; *or*

width of sheet, in the case of a single bolt

A_n = net area of the connected part

5.3.4 Bearing

5.3.4.1 *General*

The design bearing capacity (ϕV_b) of bolted connections shall be determined in accordance with Clauses 5.3.4.2 and 5.3.4.3. For conditions not specified in this Standard, ϕV_b of bolted connections shall be determined by tests.

Accessed by UNIVERSITY OF SOUTH AUSTRALIA on 03 May 2019 (Document currency not guaranteed when printed)

COPYRIGHT

5.3.4.2 *Bearing capacity without considering bolt hole deformation*

When deformation around the bolt holes is not a design consideration, the nominal bearing capacity (V_b) of the connected sheet for each loaded bolt shall be determined as follows:

$$V_b = \alpha C d_f t f_u \quad \text{. . . 5.3.4.2}$$

where

ϕ = 0.60

α = modification factor for type of bearing connection given in Table 5.3.4.2(A)

C = bearing factor given in Table 5.3.4.2(B)

d_f = nominal bolt diameter

t = base metal thickness

f_u = tensile strength of sheet

TABLE 5.3.4.2(A)

MODIFICATION FACTOR (α) FOR TYPE OF BEARING CONNECTION

Type of bearing	α
Single shear and outside sheets of double shear connection with washers under both bolt head and nut	1.00
Single shear and outside sheets of double shear connection without washers under both head and nut, or with only one washer	0.75
Single shear and outside sheets of double shear connection using oversized or short-slotted holes parallel to the applied load without washers under both bolt head and nut, or with only one washer	0.70
Single shear and outside sheets of double shear connection using short-slotted holes perpendicular to the applied load without washers under both bolt head and nut, or with only one washer	0.55
Inside sheet of double shear connection with or without washers	1.33
Inside sheet of double shear connection using oversized or short slotted holes parallel to the applied load with or without washers	1.10
Inside sheet of double shear connection using short slotted holes perpendicular to the applied load with or without washers	0.90

TABLE 5.3.4.2(B)

BEARING FACTOR (C)

Thickness of connected part (t) mm	Ratio of fastener diameter to member thickness (d/t)	C
$0.42 \le t < 4.76$	$d_f/t < 10$	3.0
	$10 \le d_f/t \le 22$	$4 - 0.1(d_f/t)$
	$d_f/t > 22$	1.8

5.3.4.3 *Bearing capacity at a bolt hole deformation of 6 mm*

When deformation around a bolt hole is a design consideration, the nominal bearing capacity (V_b) shall be determined as follows:

$$V_b = (0.183\ t + 1.53) d_f t f_u \quad \text{. . . 5.3.4.3}$$

Accessed by UNIVERSITY OF SOUTH AUSTRALIA on 03 May 2019 (Document currency not guaranteed when printed)

COPYRIGHT

5.3.5 Bolts

5.3.5.1 *Bolt in shear*

The design shear force $\left(V_{fv}^{*}\right)$ on a bolt shall satisfy—

$$V_{fv}^{*} \leq \phi V_{fv} \qquad \text{. . . 5.3.5.1(1)}$$

where

ϕ = capacity reduction factor of a bolt subject to shear (see Table 1.6.3)

V_{fv} = nominal shear capacity of a bolt

$$= 0.62 f_{uf}\,(n_n A_c + n_x A_o) \qquad \text{. . . 5.3.5.1(2)}$$

f_{uf} = minimum tensile strength of a bolt

= 400 MPa (for AS 4291.1 (ISO 898-1), Grade 4.6 bolts)

= 830 MPa (for AS 4291.1 (ISO 898-1), Grade 8.8 bolts)

n_n = number of shear planes with threads intercepting the shear plane

A_c = minor diameter area of a bolt, as specified in AS 1275

n_x = number of shear planes without threads intercepting the shear plane

A_o = plain shank area of a bolt

5.3.5.2 *Bolt in tension*

The design tensile force $\left(N_{ft}^{*}\right)$ on a bolt shall satisfy—

$$N_{ft}^{*} \leq \phi N_{ft} \qquad \text{. . . 5.3.5.2(1)}$$

where

ϕ = capacity reduction factor of a bolt subject to tension (see Table 1.6.2)

N_{ft} = nominal tensile capacity of a bolt

$$= A_s f_{uf} \qquad \text{. . . 5.3.5.2(2)}$$

A_s = tensile stress area of a bolt, as specified in AS 1275

The pull-over (pull-through) capacity of the connected sheet at the bolt head, nut or washer shall be considered where bolt tension is involved.

5.3.5.3 *Bolt subject to combined shear and tension*

A bolt required to resist simultaneously a design shear force $\left(V_{fv}^{*}\right)$ and a design tensile force $\left(N_{ft}^{*}\right)$ shall satisfy—

$$\left(\frac{V_{fv}^{*}}{\phi V_{fv}}\right)^2 + \left(\frac{N_{ft}^{*}}{\phi N_{ft}}\right)^2 \leq 1.0 \qquad \text{. . . 5.3.5.3}$$

where ϕV_{fv} and ϕN_{ft} shall be determined in accordance with Clauses 5.3.5.1 and 5.3.5.2, respectively.

Accessed by UNIVERSITY OF SOUTH AUSTRALIA on 03 May 2019 (Document currency not guaranteed when printed)

COPYRIGHT

5.4 SCREWED CONNECTIONS

5.4.1 General

This Clause applies to connections for cold-formed steel structural members using self-tapping screws under static loading of nominal diameter (d_f) where 3.0 mm ≤ d_f ≤ 7.0 mm. The screws shall be thread-forming or thread-cutting, with or without a self-drilling point.

5.4.2 Screwed connections in shear

5.4.2.1 *General*

For screwed connections in shear, the design shear capacity (ϕV_w) shall be the minimum of the capacities calculated from Clauses 5.4.2.3, 5.4.2.4, 5.4.2.5 and 5.4.2.6.

5.4.2.2 *Minimum spacing and edge distance*

The distance between centres of screws shall provide clearance for screw washers but shall be not less than three times the nominal screw diameter (d_f).

The distance from the centre of a screw to the edge of any part shall be not less than $1.5d_f$. If the end distance is parallel to the force on the fastener, the nominal shear capacity (V_{fy}) shall be limited to that calculated using Equation 5.4.2.5(2).

5.4.2.3 *Tension in the connected part*

The design tensile force (N_t^*) on the net section of the connected part shall satisfy Clause 3.2 and—

$$N_t^* \le \phi N_t \qquad \text{. . . 5.4.2.3(1)}$$

where

ϕ = capacity reduction factor of screwed connection subject to tension (see Table 1.6.3)

N_t = nominal tensile capacity of the net section of the connected part

$$= \left(\frac{2.5d_f}{s_f}\right)A_n f_u \le A_n f_u \quad \text{for a single screw, or a single row of screws perpendicular to the force} \qquad \text{. . . 5.4.2.3(2)}$$

$$= A_n f_u \quad \text{for multiple screws in the line parallel to the force} \qquad \text{. . . 5.4.2.3(3)}$$

d_f = nominal screw diameter

s_f = spacing of screws perpendicular to the line of the force; *or* width of sheet, in the case of a single screw

A_n = net area of the connected part

5.4.2.4 *Tilting and hole bearing*

The design bearing force (V_b^*) on a screw shall satisfy—

$$V_b^* \le \phi V_b \qquad \text{. . . 5.4.2.4(1)}$$

where

ϕ = capacity reduction factor of a screw, subject to tilting and hole bearing (see Table 1.6.3)

V_b = nominal bearing capacity of the connected part

Accessed by UNIVERSITY OF SOUTH AUSTRALIA on 03 May 2019 (Document currency not guaranteed when printed)

COPYRIGHT

Where the screw is in a single shear connection and where the two connected sheets are in contact at the point of fastening—

(a) for $t_2/t_1 \leq 1.0$, V_b shall be taken as the smallest of the following:

(i) $V_b = 4.2\sqrt{\left(t_2^3 d_f\right)} f_{u2}$ . . . 5.4.2.4(2)

(ii) $V_b = C t_1 d_f f_{u1}$ . . . 5.4.2.4(3)

(iii) $V_b = C t_2 d_f f_{u2}$ . . . 5.4.2.4(4)

where

t_2 = thickness of the sheet not in contact with the screw head

t_1 = thickness of the sheet in contact with the screw head

d_f = nominal screw diameter

f_{u2} = tensile strength of the sheet not in contact with the screw head

f_{u1} = tensile strength of the sheet in contact with the screw head

C = bearing factor (see Table 5.4.2.4)

(b) for $\frac{t_2}{t_1} \geq 2.5$, V_b shall be taken as the smaller of the following:

(i) $V_b = C t_1 d_f f_{u1}$ . . . 5.4.2.4(5)

(ii) $V_b = C t_2 d_f f_{u2}$ . . . 5.4.2.4(6)

(c) for $1.0 < t_2/t_1 < 2.5$, V_b shall be determined by linear interpolation between the minimum values obtained from Equations 5.4.2.4(2) to 5.4.2.4(4) and the minimum values obtained from Equations 5.4.2.4(5) and 5.4.2.4(6).

For cases where the material is not in contact at the point of fastening, the screw capacity [strength] shall be determined by testing in accordance with Section 8.

TABLE 5.4.2.4

BEARING FACTOR (*C*)

Ratio of fastener diameter to member thickness, d_f/t	C
$d_f/t < 6$	2.7
$6 \leq d_f/t \leq 13$	$3.3 - 0.1(d_f/t)$
$d_f/t > 13$	2.0

5.4.2.5 *Connection shear as limited by end distance*

The design shear force $\left(V_{fv}^*\right)$ as limited by end distance shall satisfy—

$$V_{fv}^* \leq \phi V_{fv} \quad \text{. . . 5.4.2.5(1)}$$

If $\frac{f_u}{f_y} \geq 1.05$, $\phi = 0.7$.

If $\frac{f_u}{f_y} < 1.05$, $\phi = 0.6$.

Accessed by UNIVERSITY OF SOUTH AUSTRALIA on 03 May 2019 (Document currency not guaranteed when printed)

COPYRIGHT

When the distance to an end of the connected part is parallel to the line of the applied force, the nominal shear force shall be calculated as follows:

$$V_{fv} = tef_u \qquad \text{. . . 5.4.2.5(2)}$$

where

t = thickness of the part in which the end distance is measured

e = distance measured in the line of force from the centre of a standard hole to the nearest end of the connected part

5.4.2.6 *Screws in shear*

The design shear capacity (ϕV_w) of the screw shall be determined by testing in accordance with Section 8.

5.4.3 Screwed connections in tension

5.4.3.1 *Minimum edge distance*

The distance from the centre of the screw in tension to the edge of any part shall be not less than $3d_f$.

5.4.3.2 *Pull-out and pull-over (pull-through)*

This Clause applies only to screwed connections in tension if the two sheets are in contact at the point of fastening.

The design tensile force (N_t^*) on a screw shall satisfy—

$$N_t^* \le \phi N_t \qquad \text{. . . 5.4.3.2(1)}$$

where

ϕ = 0.5

N_t = nominal capacity of the connection in tension

The nominal capacity (N_t) shall be the lesser of the following:

(a) The nominal pull-out capacity (N_{ou}) calculated as follows:

$$N_{ou} = 0.85 t_2 d_f f_{u2} \qquad \text{for } t_2 > 0.9 \text{ mm} \qquad \text{. . . 5.4.3.2(2)}$$

(b) The nominal pull-over (pull-through) capacity (N_{ov}) calculated as follows:

$$N_{ov} = 1.5 t_1 d_w' f_{ul} \qquad \text{. . . 5.4.3.2(3)}$$

Where d_w' is the effective pull-over diameter determined in accordance with Items (i), (ii) or (iii) as follows:

(i) For a round head, a hex head [Figure 5.4.3.2(a)], pancake screw washer head [Figure 5.4.3.2(b)], or hex washer head [Figure 5.4.3.2(c)] screw with an independent and solid steel washer beneath the screw head:

$$d_w' = d_h + 2t_w + t_1 \le d_w \qquad \text{. . . 5.4.3.2(4)}$$

where

d_h = screw head diameter or hex washer head integral washer diameter

t_w = steel washer thickness

d_w = steel washer diameter

Accessed by UNIVERSITY OF SOUTH AUSTRALIA on 03 May 2019 (Document currency not guaranteed when printed)

COPYRIGHT

(ii) For a round head, hex head, or hex washer head screw without an independent washer beneath the screw head:

$$d'_w = d_h \leq 20 \text{ mm} \quad \text{. . . 5.4.3.2(5)}$$

(iii) For a domed (non-solid and either independent or integral) washer beneath the screw head [Figure 5.4.3.2(d)], it is permitted to use d'_w as calculated in Equation 5.4.3.2(4), with d_h, t_w and t_1 as defined in Figure 5.4.3.2(d). In the equation, d'_w shall not exceed 20 mm.

For screws subject to tensile forces, the head of the screw or washer shall have a diameter (d_w) not less than 8 mm. Washers shall have a minimum thickness of 1.27 mm.

For screwed connections in top hat battens fastened to their supports through their bottom flange on each side, this Clause is applicable with the following equation for the nominal pull-over (pull-through) capacity (N_{ov}) of each screw connection with a ϕ factor of 0.6:

For G500 and G550 steels to AS 1397 and 0.42 mm ≤ t_1 ≤ 1.15 mm

$$N_{ov} = 8.68 t_1^2 f_{ul} \quad \text{. . . 5.4.3.2(6)}$$

For G300 steels to AS 1397 and 0.55 mm ≤ t_1 ≤ 1.0 mm

$$N_{ov} = 3.07 t_1^{1.4} d'^{\,0.6}_w f_{ul} \quad \text{. . . 5.4.3.2(7)}$$

where

d'_w = screw head diameter (d_h), 11.0 mm ≤ d'_w ≤ 14.5 mm

For other cases, such as crest fixed sheeting connections, the design tensile capacity shall be established by appropriate prototype testing. The reduction factors specified in Clause 1.5.1.1 (c)(i) do not apply to Equations 5.4.3.2(6) and 5.4.3.2(7).

Accessed by UNIVERSITY OF SOUTH AUSTRALIA on 03 May 2019 (Document currency not guaranteed when printed)

COPYRIGHT

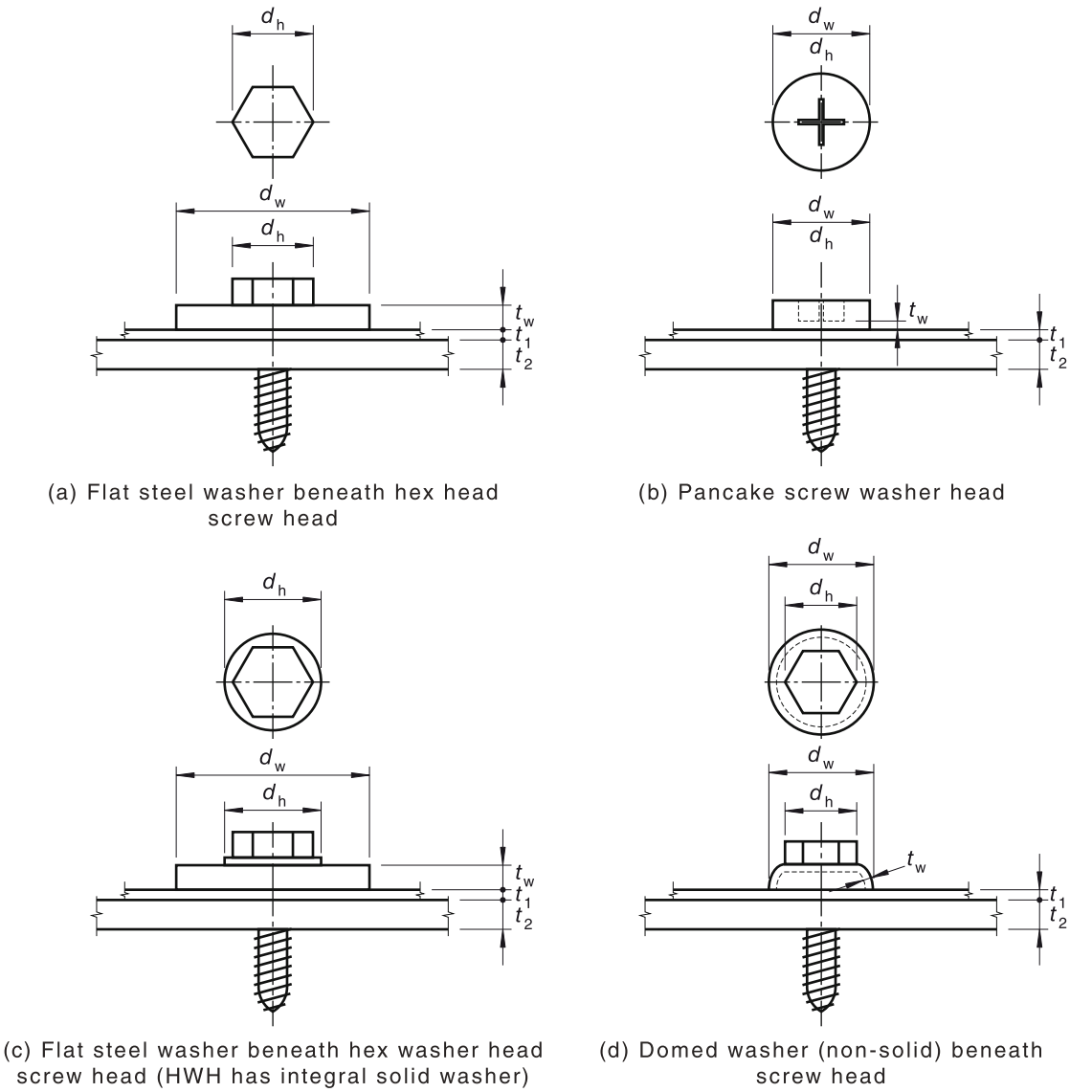

FIGURE 5.4.3.2 SCREW PULL-OVER WITH WASHER

5.4.3.3 *Screws in tension*

The tensile capacity of the screw shall be determined by testing in accordance with Section 8.

5.4.3.4 *Screwed connections subject to combined shear and pull-over*

A screwed connection required to resist simultaneously a design shear force $\left(V_b^*\right)$ and a design tensile force $\left(N_t^*\right)$ shall satisfy—

$$\left(\frac{V_b^*}{\phi V_b}\right) + 0.71\left(\frac{N_t^*}{\phi N_{ov}}\right) \leq 1.10 \qquad \ldots 5.4.3.4$$

where V_b, and N_{ov} shall be determined in accordance with Clauses 5.4.2.4 and 5.4.3.2(b), respectively. In using Clause 5.4.2.4, only Equation 5.4.2.4(6) needs to be considered. A value of $\phi = 0.65$ shall be used. Equation 5.4.3.4 shall be valid for connections that meet the following requirements:

Accessed by UNIVERSITY OF SOUTH AUSTRALIA on 03 May 2019 (Document currency not guaranteed when printed)

COPYRIGHT

(a) 0.72 mm ≤ t_1 ≤ 1.13 mm;

(b) No. 12 and No. 14 self-drilling screws with or without washers;

(c) d_w ≤ 20 mm;

(d) Washer dimension limitations of Clause 5.4.3 apply;

(e) f_{u1} ≤ 500 MPa; and

(f) t_2/t_1 ≥ 2.5.

For eccentrically loaded connections that produce a non-uniform pull-over force on the fastener, the nominal pull-over capacity shall be taken as 50 percent of N_{ov}.

Where the connection does not meet the requirements specified above, the design capacity of the screwed connection shall be determined by testing in accordance with Section 8.

5.4.3.5 *Screwed connections subject to combined shear and pull-out*

A screwed connection required to resist simultaneously a design shear force $\left(V_b^*\right)$ and a design tensile force $\left(N_t^*\right)$ shall satisfy—

$$\left(\frac{V_b^*}{\phi V_b}\right)+\left(\frac{N_t^*}{\phi N_{ou}}\right)\leq 1.15 \qquad \ldots 5.4.3.5$$

where V_b and N_{ou} shall be determined in accordance with Clauses 5.4.2.4 and 5.4.3.2(a), respectively. In using Clause 5.4.3.2, only Equation 5.4.2.3(2) needs to be considered. A value of $\phi = 0.60$ shall be used. Equation 5.4.3.5 shall be valid for connections that meet the following requirements:

(a) 0.754 mm ≤ t_2 ≤ 1.84 mm;

(b) No. 10, 12 or 14 self-drilling screws with or without washers;

(c) f_{u2} ≤ 834 MPa; and

(d) 1.0 ≤ f_u/f_y ≤ 1.62.

Where the connection does not meet the requirements specified above, the design capacity of the screwed connection shall be determined by testing in accordance with Section 8.

5.4.3.6 *Screws subject to combined shear and tension*

A screw required to resist simultaneously a design shear force $\left(V^*\right)$ and a design tensile force $\left(N_t^*\right)$ shall satisfy—

$$\left(\frac{V^*}{\phi V_{screw}}\right)+\left(\frac{N_t^*}{\phi N_{screw}}\right)\leq 1.3 \qquad \ldots 5.4.3.6$$

where V_{screw} and N_{screw} shall be determined by testing in accordance with Section 8.

5.5 POWER-ACTUATED FASTENERS (PAFs)

5.5.1 General

The provisions of this Clause 5.5 shall apply to power-actuated fasteners (PAFs)) that are driven into steel substrates. The thickness of the substrate not in contact with the PAF head shall be limited to 19 mm. The thickness of the substrate in contact with the PAF head shall be limited to a maximum of 1.5 mm. The washer diameter shall not exceed 15 mm in computations, although the actual diameter may be larger. PAF diameter shall be limited to a range 2.8 mm to 5.3 mm. See Figure 5.5.1 for geometric variables in PAFs.

Accessed by UNIVERSITY OF SOUTH AUSTRALIA on 03 May 2019 (Document currency not guaranteed when printed)

COPYRIGHT

Alternatively, the design capacity for any particular application may be determined in accordance with Section 8.

The following notation shall apply to Clause 5.5:

a = major diameter of tapered PAF head

d = fastener diameter at near side of embedment

= d_s for PAF installed such that entire point is located behind far side of embedment material

d_{ae} = average embedded diameter, computed as average of installed fastener diameters measure at near side and far side of embedment material

= d_s for PAF installed such that entire point is located behind far side of embedment material

d_s = nominal shank diameter

d'_w = actual diameter of washer or fastener head in contact with retained substrate ≤ 15 mm

f_{bs} = base stress parameter

= 455 MPa

f_{u1} = tensile strength of member in contact with PAF head or washer

f_{u2} = tensile strength of member not in contact with PAF head or washer

f_{uh} = tensile strength of hardened PAF steel

f_{ut} = tensile strength of non-hardened PAF steel

f_{y2} = yield stress of member not in contact with PAF or washer

HRC_p = Rockwell C hardness of PAF steel

l_{dp} = PAF point length

N_{not} = nominal pull-out capacity in tension per PAF

N_{nov} nominal pull-over capacity in tension per PAF

N_{ntp} = nominal tensile capacity per PAF

N_{tp} = nominal tensile capacity of PAF

V_{nbp} = nominal bearing and tilting capacity per PAF

V_{nos} nominal pull-out capacity in shear per PAF

V_{nsp} = nominal shear capacity per PAF

V_{sp} = nominal shear capacity of PAF

t_1 = thickness of member in contact with PAF head or washer

t_2 = thickness of member not in contact with PAF head or washer

t_w = steel washer thickness

Accessed by UNIVERSITY OF SOUTH AUSTRALIA on 03 May 2019 (Document currency not guaranteed when printed)

COPYRIGHT

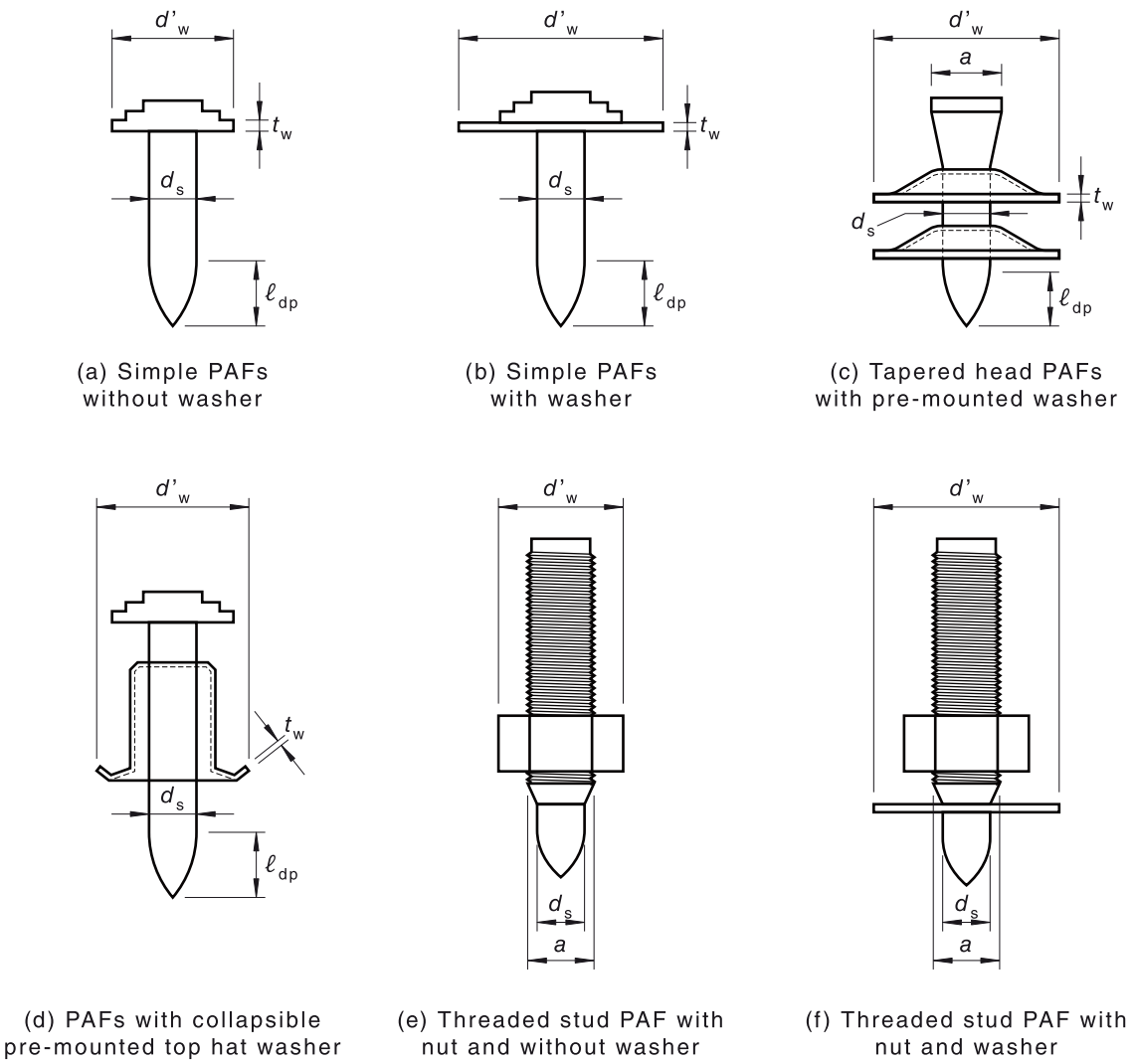

FIGURE 5.5.1 GEOMETRIC VARIABLES IN POWER-ACTUATED FASTENERS

5.5.2 Minimum spacing, edge and end distances

The minimum centre to centre spacing of PAFs and the minimum distance from the centre of fastener to any edge of the connected part, regardless of the direction of the force, shall be as provided in Table 5.5.2.

TABLE 5.5.2

MINIMUM REQUIRED EDGE AND SPACING DISTANCES

PAF shank diameter, (d_s), mm	Minimum PAF spacing mm	Minimum edge distance mm
$2.8 \le d_s < 5.1$	25	13
$5.1 \le d_s < 5.3$	41	25

Accessed by UNIVERSITY OF SOUTH AUSTRALIA on 03 May 2019 (Document currency not guaranteed when printed)

COPYRIGHT

5.5.3 Power-actuated fasteners in tension

5.5.3.1 *General*

The design tensile force per PAF shall be the minimum of the available capacities determined by the applicable Clauses 5.5.3.2 to 5.5.3.4. Washer thickness (t_w), limitations of Clause 5.4 shall apply, except for tapered head fasteners, the minimum thickness (t_w) shall be not less than 1.0 mm. The thickness of collapsible pre-mounted top-hat washers shall not exceed 0.5 mm.

5.5.3.2 *PAF in tension*

For PAFs installed such that no part of PAF point length (l_{dp}) extends above the near side of the embedment material, the design tension capacity (ϕN_{ntp}) may be calculated in accordance with the following equation:

$$N_{ntp} = \pi \left(\frac{d}{2} \right)^2 f_{uh} \qquad \text{. . . 5.5.3.2(1)}$$

where $\phi = 0.60$

f_{uh} in Equation 5.5.3.2(1) shall be calculated with Equation 5.5.3.2(2). Alternatively, for fasteners with HRC_p of 52 or more, f_{uh} may be taken as 1790 MPa.

$$f_{uh} = (e)^{(HRCp/40)} f_{bs} \qquad \text{. . . 5.5.3.2(2)}$$

where $e = 2.718$

5.5.3.3 *Pull-out*

The design pull-out capacity, (ϕN_{not}) shall be determined according to Section 8. Alternatively, for connections with the entire PAF point length (l_{dp}) behind the far side of the embedment material, the following ϕ factor is permitted to determine the design capacity in accordance with Clause 1.6.3 with $\phi = 0.4$.

5.5.3.4 *Pull-over*

The design pull-over capacity (ϕN_{nov}), shall be determined in accordance with the following equation:

$$N_{nov} = \alpha_w t_1 d'_w f_{u1} \qquad \text{. . . 5.5.3.4}$$

where

ϕ = 0.50

α_w = 1.5 for screw-, bolt-, nail-like flat heads or simple PAF, with or without head washers (see Figures 5.5.1(a) and 5.5.1(b))

= 1.5 for threaded stud PAFs and for PAFs with tapered standoff heads that achieve pull-over by friction and locking of the pre-mounted washer [see Figure 5.5.1(c)], with a/d_s ratio not less than 1.6 and ($a - d_s$) of not less than 3.1 mm

= 1.25 for threaded stud PAFs and for PAFs with tapered standoff heads that achieve pull-over by friction and locking of pre-mounted washer [see Figure 5.5.1(c)], with a/d_s ratio not less than 1.4 and ($a - d_s$) of not less than 2.0 mm

= 2.0 for PAFs with collapsible spring washer [see Figure 5.5.1(d)]

Accessed by UNIVERSITY OF SOUTH AUSTRALIA on 03 May 2019 (Document currency not guaranteed when printed)

COPYRIGHT

5.5.4 Power-actuated fasteners in shear

5.5.4.1 *General*

The design shear capacity (ϕV_w) shall be the minimum of the design capacities determined by the applicable Clauses 5.5.4.2 to 5.5.4.6.

5.5.4.2 *Shear strength*

For PAFs installed such that no part of PAF point length, (l_{dp}) extends above the near side of the embedment material, the design shear capacity (ϕV_{nsp}) may be calculated in accordance with the following equation:

$$V_{nsp} = 0.6\pi\left(\frac{d}{2}\right)^2 f_{uh} \qquad \text{. . . 5.5.4.2}$$

where

$$\phi = 0.60 \qquad \text{. . . 5.5.4.2}$$

f_{uh} in Equation 5.5.4.2 shall be calculated with Equation 5.5.3.2(2).

5.5.4.3 *Bearing and tilting strength*

The design shear capacity shall be determined in accordance with the following equation:

$$V_{nbp} = \alpha_b t_1 d_s f_{ul} \qquad \text{. . . 5.5.4.3}$$

where

ϕ = 0.80

α_b = 3.7 for connections with PAF types as shown in Figures 5.5.1(c) and 5.5.1(d)

= 3.2 for other types

Equation 5.5.4.3 shall apply for connections in the following limits:

$t_2/t_1 \geq 2$

$t_2 \geq 3.2$ mm

3.8 mm $\leq d_s \leq$ 4.6 mm

5.5.4.4 *Pull-out strength*

For PAFs driven through a depth of at least $0.6t_2$, the design pull-out capacity in shear (ϕV_{nos}) shall be calculated in accordance with the following equation:

$$V_{nos} = \frac{d_{ae}^{1.8} t_2^{0.2} \left(f_{y2} E^2\right)^{1/3}}{30} \qquad \text{. . . 5.5.4.4}$$

where ϕ = 0.60

Equation 5.5.4.4 shall apply for connections in the following limits:

ϕ = 0.65

2.9 mm $\leq t_2 \leq$ 19 mm

2.7 mm $\leq d_s \leq$ 5.2 mm

5.5.4.5 *Net section rupture*

The design capacity due to net cross-section rupture and block shear rupture shall be determined in accordance with Clauses 5.3.3 and 5.7. In calculations of net section rupture and block shear rupture limit states, the hole size shall be taken as 1.10 times the nominal PAF shank diameter (d_s).

Accessed by UNIVERSITY OF SOUTH AUSTRALIA on 03 May 2019 (Document currency not guaranteed when printed)

COPYRIGHT

5.5.4.6 *Shear capacity limited by edge distance*

The design shear capacity limited by edge distance shall be calculated in accordance with Clause 5.3.2.

5.5.5 Combined shear and tension

Effects of combined shear and tension on the PAF connection, including the interaction due to combined shear and pull-out, combined shear and pull-over, and combined shear and tension on the PAF shall be tested in accordance with Section 8.

5.6 BLIND RIVETED CONNECTIONS

5.6.1 General

This Clause applies to connections for cold-formed steel structural members using blind rivets of nominal diameter (d_f), where 3.0 mm ≤ d_f ≤ 7.0 mm.

5.6.2 Riveted connections in shear

5.6.2.1 *Minimum spacing and edge distance*

The distance between centres of rivet holes shall be not less than 3 times the nominal blind rivet diameter (d_f).

The distance from the centre of a rivet to the edge of any part shall be not less than $1.5d_f$. If the end distance is parallel to the force on the fastener, the nominal shear capacity (V_{fv}) shall be limited to that calculated using Equation 5.6.2.4(2).

For riveted connections in shear, the design shear capacity shall be the minimum of the capacities calculated from Clauses 5.6.2.2, 5.6.2.3, 5.6.2.4 and 5.6.2.5.

5.6.2.2 *Tension in the connected part*

The design tensile force on the net section of the connected part shall satisfy Clause 3.2 and—

$$N_t^* \le \phi N_t \qquad \text{. . . 5.6.2.2.(1)}$$

where

ϕ = capacity reduction factor of blind rivet connection subject to net section tension (see Table 1.6.3)

N_t = nominal tensile capacity of the net section of the connected part

$$= \left(\frac{2.5d_f}{s_f}\right) A_n f_u \le A_n f_u \quad \text{for a single rivet, or a single row of rivet perpendicular to the force} \qquad \text{. . . 5.6.2.2.(2)}$$

$$= A_n f_u \quad \text{for multiple rivets in the line parallel to the force} \qquad \text{. . . 5.6.2.2.(3)}$$

d_f = nominal rivet diameter

s_f = spacing of rivets perpendicular to the line of the force; *or* width of sheet, in the case of a single rivet

A_n = net area of the connected part

Accessed by UNIVERSITY OF SOUTH AUSTRALIA on 03 May 2019 (Document currency not guaranteed when printed)

COPYRIGHT

5.6.2.3 *Tilting and hole bearing*

The design bearing force $\left(V_b^*\right)$ on a rivet shall satisfy—

$$V_b^* \le \phi V_b \qquad \text{. . . 5.6.2.3(1)}$$

where

ϕ = capacity reduction factor of a blind rivet subject to tilting and hole bearing (see Table 1.6.3)

V_b = nominal bearing capacity of the connected part

Where the rivet is in a single shear connection and where the two connected sheets are in contact at the point of fastening—

(a) for $t_2/t_1 \le 1.0$, V_b shall be taken as the smallest of the following:

(i) $$V_b = 3.6\sqrt{\left(t_2^3 d_f\right)} f_{u2} \qquad \text{. . . 5.6.2.3(2)}$$

(ii) $$V_b = 2.1 t_1 d_f f_{ul} \qquad \text{. . . 5.6.2.3(3)}$$

(iii) $$V_b = 2.1 t_2 d_f f_{u2} \qquad \text{. . . 5.6.2.3(4)}$$

where

t_1 = thickness of the sheet in contact with the rivet head

t_2 = thickness of the sheet not in contact with the rivet head

d_f = nominal rivet diameter

f_{ul} = tensile strength of the sheet in contact with the rivet head

f_{u2} = tensile strength of the sheet not in contact with the rivet head

(b) for $t_2/t_1 \ge 2.5$, V_b shall be taken as the smaller of the following:

(i) $$V_b = 2.1 t_1 d_f f_{ul} \qquad \text{. . . 5.6.2.3(5)}$$

(ii) $$V_b = 2.1 t_2 d_f f_{u2} \qquad \text{. . . 5.6.2.3(6)}$$

(c) for $1.0 < t_2/t_1 < 2.5$, V_b shall be determined by linear interpolation between the minimum value obtained from Equations 5.6.2.3(2) to 5.6.2.3(4) and the minimum value obtained from Equations 5.6.2.3(5) and 5.6.2.3(6).

For cases where the material is not in contact at the point of fastening, the rivet capacity shall be determined by testing in accordance with Section 8.

5.6.2.4 *Connection shear as limited by tearout*

The design shear force $\left(V_{fv}^*\right)$ as limited by end distance shall satisfy—

$$V_{fv}^* \le \phi V_{fv} \qquad \text{. . . 5.6.2.4(1)}$$

When the distance to an end of the connected part is parallel to the line of the applied force, the nominal shear force shall be calculated as follows:

$$V_{fv} = t e f_u \qquad \text{. . . 5.6.2.4(2)}$$

where

ϕ = capacity reduction factor of riveted connection subject to tension (see Table 1.6.3)

t = thickness of the part in which the end distance is measured

Accessed by UNIVERSITY OF SOUTH AUSTRALIA on 03 May 2019 (Document currency not guaranteed when printed)

COPYRIGHT

e = distance measured in the line of force from the centre of a standard hole to the nearest end of the connected part

5.6.2.5 *Rivets in shear*

The nominal shear capacity of the rivet shall be determined by testing and shall be not less than $1.25V_b$, where V_b shall be calculated in accordance with Clause 5.6.2.3.

NOTE: The design tensile capacity of riveted connections may be established by prototype testing in accordance with Section 8.

5.7 RUPTURE

5.7.1 Shear rupture

At beam-end connections, where one or more flanges are coped and failure may occur along a plane through the fasteners, the design shear force $\left(V_n^*\right)$ shall satisfy—

$$V_n^* \leq \phi V_n \qquad \text{. . . 5.7.1(1)}$$

where

ϕ = capacity reduction factor of beam-end connections subject to shear rupture (see Table 1.6.3)

V_n = nominal shear capacity of the beam-end connection

$$= 0.6 f_u A_{wn} \qquad \text{. . . 5.7.1(2)}$$

A_{wn} = net area of the web

$$= (d_{wc} - n_h d_h)t \qquad \text{. . . 5.7.1(3)}$$

d_{wc} = coped depth of the web

n_h = number of holes in the critical plane

d_h = diameter of the hole

t = thickness of the coped web

5.7.2 Tension rupture

The nominal tension rupture strength along a path in affected elements of connected members shall be determined by Equation 3.2.2(2) with k_t equal to 1.0.

5.7.3 Block shear rupture

At beam-end or tension connections with possible shear and tension rupture planes (see Figure 5.7.3), the design action effect (S^*) shall satisfy—

$$S^* \leq \phi R_n \qquad \text{. . . 5.7.3(1)}$$

where

ϕ = capacity reduction factor for block shear rupture of the beam-end or tension member connection

= 0.80 for bolted connections

R_n = nominal capacity for block shear rupture of the beam-end or tension member connection

Accessed by UNIVERSITY OF SOUTH AUSTRALIA on 03 May 2019 (Document currency not guaranteed when printed)

COPYRIGHT

The nominal capacity for block shear rupture of the beam-end or tension member connection (R_n) shall be determined as follows:

$$R_n = 0.6\, f_y\, A_{av} + f_u\, A_{nt} \left(0.9 + 0.1 \frac{d_f}{s_f} \right) \qquad \ldots 5.7.3(2)$$

where

A_{nt} = net area subject to tension in block shear rupture

A_{av} = active shear area in block shear rupture

= $2L_{av}t$

L_{av} = $L_{gv} - n_r d_h/2$

L_{gv} = distance from free edge to centreline of bolt furthest from the edge

n_r = number of rows of bolts

s_f = spacing of bolts perpendicular to the line of the force

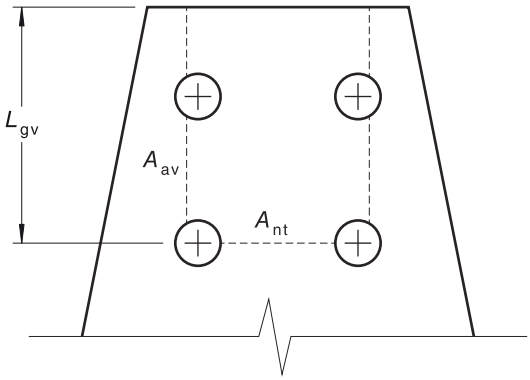

FIGURE 5.7.3 BLOCK SHEAR FAILURE PLANES

5.8 OTHER CONNECTIONS USING ANY TYPE OF FASTENERS

The design capacity for a specific connection using any type of fasteners may be determined by prototype testing in accordance with Section 8.

Accessed by UNIVERSITY OF SOUTH AUSTRALIA on 03 May 2019 (Document currency not guaranteed when printed)

COPYRIGHT

SECTION 6 FATIGUE

6.1 GENERAL

6.1.1 Requirements

This Section applies to the design of cold-formed steel members and connections subject to cyclic loading within the elastic range stresses of frequency and magnitude sufficient to initiate cracking and progressive failure (fatigue).

The provisions of this Section apply to stresses calculated on the basis of unfactored loads. The maximum permitted tensile stress due to unfactored loads is $0.6f_y$.

Stress range is defined as the magnitude of change in stress due to the application or removal of the unfactored live load. In the case of a stress reversal, the stress range shall be computed as the sum of the absolute values of maximum repeated tensile and compressive stresses or the sum of the absolute values of maximum shearing stresses of opposite direction at the point of probable crack initiation.

The occurrence of full design wind or earthquake loads is too infrequent to warrant consideration of fatigue design in buildings. The fatigue design of cladding, fixings and its immediate support shall be in accordance with AS 1562.1. Wind-induced oscillations can cause fatigue cracks to occur in structures such as masts, lighting poles, traffic sign supports and chimneys, and, therefore, their effect on fatigue shall be determined.

Evaluation of fatigue resistance to this Section is not required if the number of cycles of application of live load is less than 20 000.

The cyclic load resistance determined by the provisions of this Section is applicable to—

(a) structures with suitable corrosion protection or subject only to non-aggressive atmospheres; and

(b) structures subject to temperatures not exceeding 150°C.

6.1.2 Definitions

For the purpose of this Section, the definitions below apply.

6.1.2.1 *Constant stress range fatigue limit*

The highest constant stress range for each detail category at which fatigue cracks are not expected to propagate (see Figure 6.3).

6.1.2.2 *Cut-off limit*

For each detail category, the highest variable stress range that does not require consideration when carrying out cumulative damage calculations (see Figure 6.3).

6.1.2.3 *Design life*

The period over which a structure or structural element is required to perform its function without repair.

6.1.2.4 *Design spectrum*

The sum of the stress spectra from all of the nominal loading events expected during the design life.

6.1.2.5 *Detail category*

A designation given to a particular detail to indicate which of the S-N curves is to be used in the fatigue assessment.

Accessed by UNIVERSITY OF SOUTH AUSTRALIA on 03 May 2019 (Document currency not guaranteed when printed)

COPYRIGHT

NOTES:

1 The detail category takes into consideration the local stress concentration at the detail, the size and shape of the maximum acceptable discontinuity, the loading condition, metallurgical effects, residual stresses, the welding process and any post weld improvement.

2 The detail category number is defined by the fatigue strength at 2×10^6 cycles on the S-N curve (see Figure 6.3).

6.1.2.6 *Discontinuity*

An absence of material, causing a stress concentration.

NOTE: Typical discontinuities include cracks, scratches, corrosion pits, lack of penetration, slag inclusions, cold laps, porosity and undercut.

6.1.2.7 *Fatigue*

Damage caused by repeated fluctuations of stress leading to gradual cracking of a structural element.

6.1.2.8 *Fatigue loading*

A set of nominal loading events described by the distribution of the loads, their magnitudes and the numbers of applications of each nominal loading event.

6.1.2.9 *Fatigue strength*

The stress range defined in Clause 6.3 for each detail category varying with the number of stress cycles (see Figure 6.3).

6.1.2.10 *Miner's summation*

The cumulative damage calculation based on the Palmgren–Miner summation or equivalent.

6.1.2.11 *Nominal loading event*

The loading sequence for the structure or structural element.

NOTE: One nominal loading event may produce one or more stress cycles depending on the type of load and the point in the structure under consideration.

6.1.2.12 *S-N curve*

A curve defining the limiting relationship between the number of stress cycles and stress range for a detail category.

6.1.2.13 *Stress cycle*

One cycle of stress defined by stress cycle counting.

6.1.2.14 *Stress cycle counting method*

Any rational method used to identify individual stress cycles from the stress history.

6.1.2.15 *Stress range*

The algebraic difference between two extremes of stress.

6.1.2.16 *Stress spectrum*

A histogram of the stress cycles produced by a nominal loading event.

Accessed by UNIVERSITY OF SOUTH AUSTRALIA on 03 May 2019 (Document currency not guaranteed when printed)

COPYRIGHT

6.1.3 Notation

For the purpose of this Section, the following applies:

f_c = fatigue strength corrected for thickness of material

f_f = uncorrected fatigue strength

f_{rn} = detail category reference fatigue strength at n_r-normal stress

f_{rnc} = corrected detail category reference fatigue strength for normal stress

f_{rs} = detail category reference fatigue strength at n_r-shear stress

f_{rsc} = corrected detail category reference fatigue strength for shear stress

f_y = yield stress

f_3 = detail category fatigue strength at constant amplitude fatigue limit (5×10^6 cycles)

f_{3c} = corrected detail category fatigue strength at constant amplitude fatigue limit

f_5 = detail category fatigue strength at cut off limit (10^8 cycles)

f_{5c} = corrected detail category reference fatigue strength at cut off limit

f^* = design stress range

f_i^* = design stress range for loading event i

l = length of member

n_i = number of cycles of nominal loading event i, producing f_i^*

n_r = reference number of stress cycles (2×10^6 cycles)

n_{sc} = number of stress cycles

t_p = plate thickness

α_s = inverse of the slope of the S-N curve

β_{tf} = thickness correction factor

ϕ = capacity factor

6.1.4 Method

For the reference design condition, the capacity factor (ϕ) shall be taken as 1.0. The reference design condition implies the following:

(a) The detail is located on a redundant load path, in a position where failure at that point alone will not lead to overall collapse of the structure.

(b) The stress history is estimated by conventional methods.

(c) The load cycles are not highly irregular.

(d) The detail is accessible for, and subject to, regular inspection.

The capacity factor (ϕ) shall be reduced when any of the above conditions do not apply.

For non-redundant load paths, the capacity factor (ϕ) shall be less than or equal to 0.70.

Accessed by UNIVERSITY OF SOUTH AUSTRALIA on 03 May 2019 (Document currency not guaranteed when printed)

COPYRIGHT

6.1.5 Thickness effect

The thickness correction factor (β_{tf}) shall be taken as—

$$\beta_{tf} = 1.0$$

except for a transverse fillet or butt-welded connection involving a plate thickness (t_p) greater than 25 mm, where β_{tf} shall be calculated as follows:

$$\beta t_f = \left(\frac{25}{t_p}\right)^{0.25} \quad \text{. . . 6.1.5(1)}$$

The uncorrected fatigue strength (f_f) shall be reduced to a corrected fatigue strength (f_c) using—

$$f_c = \beta_{tf} f_f \quad \text{. . . 6.1.5(2)}$$

The uncorrected detail category reference fatigue strength for normal stress (f_{rn}) shall be reduced to a corrected detail category reference fatigue strength for normal stress (f_{rnc}) using—

$$f_{rnc} = \beta_{tf} f_{rn} \quad \text{. . . 6.1.5(3)}$$

The uncorrected detail category reference fatigue strength for shear stress (f_{rs}) shall be reduced to a corrected detail category reference fatigue strength for shear stress (f_{rsc}) using—

$$f_{rsc} = \beta_{tf} f_{rs} \quad \text{. . . 6.1.5(4)}$$

The uncorrected detail category fatigue strength at constant amplitude fatigue limit (f_3) shall be reduced to a corrected detail category fatigue strength at constant amplitude fatigue limit (f_{3c}) using—

$$f_{3c} = \beta_{tf} f_3 \quad \text{. . . 6.1.5(5)}$$

The uncorrected detail category fatigue strength at cut-off limit (f_5) shall be reduced to a corrected detail category reference fatigue strength at cut-off limit (f_{5c}) using—

$$f_{5c} = \beta_{tf} f_5 \quad \text{. . . 6.1.5(6)}$$

6.2 CALCULATION OF MAXIMUM STRESSES AND STRESS RANGE

Calculated stresses shall be based on elastic analysis. Stresses shall not be amplified by stress concentration factors for geometrical discontinuities.

For bolts and threaded rods subject to axial tension, the calculated stresses shall include the effects of prying action, if applicable.

In the case of axial stress combined with bending, the maximum stresses, of each kind, shall be those determined for concurrent arrangements of applied load.

For members having symmetric cross-sections, the fasteners and welds shall be arranged symmetrically about the axis of the member, or the total stresses including those due to eccentricity shall be included in the calculation of the stress range.

For axially stressed angle members, where the centre of gravity of the connecting welds lies between the line of the centre of gravity of the angle cross-section and the centre of the connected leg, the effects of eccentricity shall be ignored. If the centre of gravity of the connecting welds lies outside this zone, the total stresses, including those due to joint eccentricity, shall be included in the calculation of stress range.

Accessed by UNIVERSITY OF SOUTH AUSTRALIA on 03 May 2019 (Document currency not guaranteed when printed)

COPYRIGHT

6.3 DETAIL CATEGORIES FOR CLASSIFIED DETAILS

For cold-formed sections, the detail categories to be used for the various constructional details are given in Table 6.3(A).

In the classification method, the detail category is a designation given to a particular detail to indicate which of the S-N curves shown in Figure 6.3 shall be used in fatigue assessment. The detail category shall be the nominal stress range corresponding to 2×10^6 cycles on a fatigue strength curve of a given construction detail.

The fatigue strength curves for the different detail categories are defined by—

(a) $\log(n_{sc}) = \log(a) - 3\log(f_f)$, for $n_{sc} \leq 5 \times 10^6$ . . . 6.3(1)

(b) $\log(n_{sc}) = \log(a) - 5\log(f_f)$, for $5 \times 10^6 < n_{sc} \leq 10^8$ . . . 6.3(2)

where

n_{sc} = number of stress cycles

$\log(a)$ = constant which depends on the related part of the slope [see Table 6.3(B)]

f_f = uncorrected fatigue strength

The values of the constant [$\log(a)$] for the different parts of the fatigue strength S-N curves, as well as the constant stress range fatigue limit and cut-off limit for each detail category are given in Table 6.3(B).

The welds in the welded details given in Table 6.3(A) for Detail Categories 118 and below shall conform with Category SP as specified in AS/NZS 1554.1.

Accessed by UNIVERSITY OF SOUTH AUSTRALIA on 03 May 2019 (Document currency not guaranteed when printed)

COPYRIGHT

TABLE 6.3(A)

DETAIL CATEGORY CLASSIFICATION FOR COLD-FORMED STEEL MEMBERS AND CONNECTIONS

Stress category	Detail category	Construction details	
		Illustration	Description
I	174	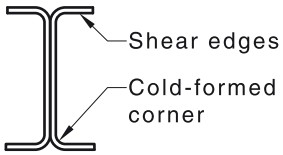 Cold-formed steel channels Detail Category I	*Non-welded products*: As-received base metal and components with as-rolled surfaces, including sheared edges and cold-formed corners
II	118	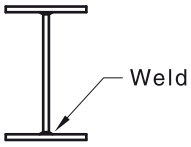 Welded I Beam Detail Category II	*Members connected by continuous longitudinal welds*: As-received base metal and weld metal in members connected by continuous longitudinal welds loaded in shear
III	81	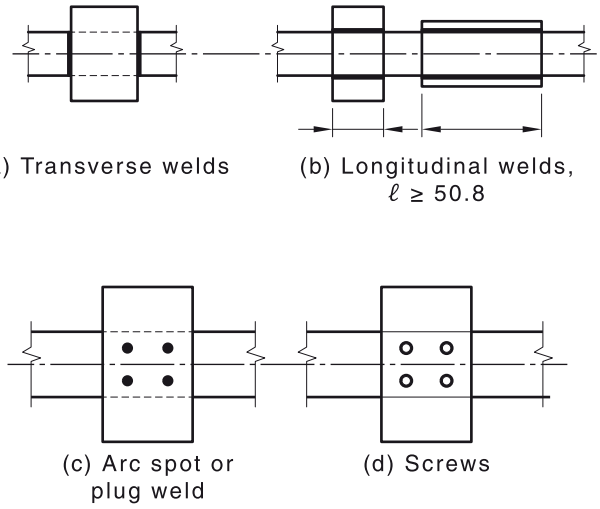 Detail Category III	*Welded attachments and bolt or screw connections*: (a) and (b) Welded attachments to a plate or a beam, transverse fillet welds and continuous fillet welds loaded in shear less than or equal to 50 mm (c) Bolt and screw connections and spot welds
IV	55	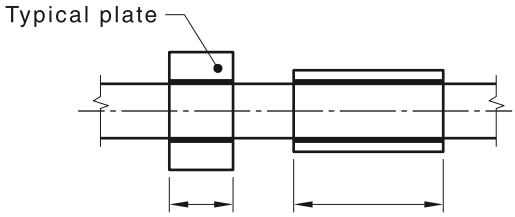 (a) Longitudinal welds 50.8 mm < ℓ ≤ 101.6 Detail Category IV	*Longitudinal fillet-welded attachments*: Longitudinal fillet-welded attachments greater than 50 mm parallel to the direction of the applied stress, and intermittent welds parallel to the direction of the applied force

where

Stress category I: non-welded products

Stress category II: members connected by continuous longitudinal welds

Stress category III: welded attachments and bolt or screw connections

Stress category IV: longitudinal fillet-welded attachments

Accessed by UNIVERSITY OF SOUTH AUSTRALIA on 03 May 2019 (Document currency not guaranteed when printed)

COPYRIGHT

TABLE 6.3(B)

VALUES FOR DEFINING FATIGUE STRENGTH CURVES FOR DIFFERENT DETAIL CATEGORIES

Detail category	Log(a) for $n_{sc} \le 5 \times 10^6$ ($\alpha_s = 3$)	Log(a) for $5 \times 10^6 \le n_{sc} \le 10^8$ ($\alpha_s = 5$)	Constant stress range fatigue limit, f_3 MPa	Cut-off limit, f_5 MPa
174	13.0197	17.2335	128	70
118	12.5146	16.3916	87	48
81	12.0197	15.5668	59	33
55	11.5146	14.7249	40	22

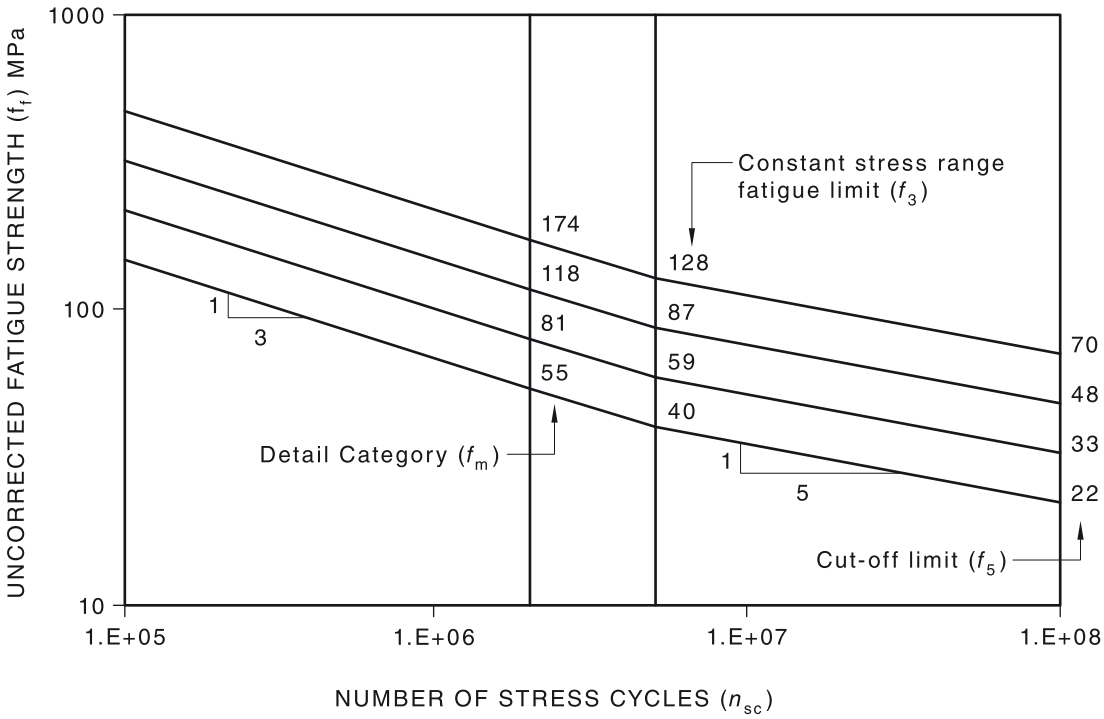

FIGURE 6.3 FATIGUE STRENGTH CURVES FOR DIFFERENT DETAIL CATEGORIES

6.4 FATIGUE ASSESSMENT

6.4.1 Constant stress range

The design stress range (f^*), at any point in the structure subject only to constant stress range cycles, shall satisfy—

$$\frac{f^*}{\phi f_c} \le 1.0 \qquad \text{. . . 6.4.1}$$

Accessed by UNIVERSITY OF SOUTH AUSTRALIA on 03 May 2019 (Document currency not guaranteed when printed)

COPYRIGHT

6.4.2 Variable stress range

The design stress range (f^*), at any point in the structure at which the stress range varies, shall satisfy the following:

(a) *Normal stresses*

$$\frac{\Sigma_i n_i \left(f_i^*\right)^3}{5\times10^6\left(\phi f_{3c}\right)^3}+\frac{\Sigma_j n_j \left(f_j^*\right)^5}{5\times10^6\left(\phi f_{3c}\right)^5}\le 1.0 \qquad \text{. . . 6.4.2(1)}$$

(b) *Shear stresses*

$$\frac{\Sigma_k n_k \left(f_k^*\right)^5}{2\times10^6\left(\phi f_{rsc}\right)^5}\le 1.0 \qquad \text{. . . 6.4.2(2)}$$

where—

(i) the summation Σ_i is for *i* design stress ranges $\left(f_i^*\right)$ for which $\phi f_{3c} < f_i^*$;

(ii) the summation Σ_j is for *j* design stress ranges $\left(f_i^*\right)$ for which $\phi f_{sc} \le f_i^* < \phi f_{3c}$; and

(iii) the summation Σ_k is for *k* design stress ranges $\left(f_k^*\right)$ for shear stresses $\phi f_{5c} \le f_k^*$.

Accessed by UNIVERSITY OF SOUTH AUSTRALIA on 03 May 2019 (Document currency not guaranteed when printed)

COPYRIGHT

SECTION 7 DIRECT STRENGTH METHOD

7.1 GENERAL REQUIREMENTS

7.1.1 General

This Section applies to the determination of the nominal axial compression (N), bending (M) and shear (V) capacities of cold-formed steel members.

Clauses 7.2.1, 7.2.2, and 7.2.3 provide a method applicable to all cold-formed steel compression members, members subject to bending, and members subject to shear. Those members meeting the geometric and material limitations of Clause 7.1.2 have been pre-qualified for use, and the calibrated ϕ factors given in Clauses 7.2.1, 7.2.2 and 7.2.3 apply. Other compression members, members subject to bending, and members subject to shear shall use the provisions of Clauses 7.2.1, 7.2.2 and 7.2.3 but the ϕ factors for rational analysis given in Clause 1.6.3(c) shall apply.

The direct strength method does not provide explicit provisions for members subject to web crippling, and combined bending and web crippling. Further, no provisions are given for structural assemblies or connections and joints. The provisions of Sections 2, 3 and 4, when applicable, shall be used for all cases.

For members or situations that are not applicable to Sections 2, 3 and 4, extensions to the direct strength method may exist. Extensions to the direct strength method are subject to the same provisions as any other rational analysis procedure specified in Clause 1.6.3(c). The applicable provisions of Sections 2, 3 and 4 shall be met when they exist and the reduced ϕ factors shall be used for the design capacity when rational analysis is conducted.

7.1.2 Pre-qualified members

Compression members that fall within the geometric limitations given in Table 7.1 have been pre-qualified and shall be permitted to be designed using the ϕ factors given in Clause 7.2.1.1.

Members subject to bending that fall within the geometric limitations given in Table 7.1 have been pre-qualified and shall be permitted to be designed using the ϕ factors given in Clause 7.2.2.1.

Members subject to shear that fall within the geometric limitations given in Table 7.1 have been pre-qualified and shall be permitted to be designed using the ϕ factors given in Clause 7.2.3.1.

7.1.3 Elastic buckling

Analysis shall be required for determining the elastic buckling loads or moments, or both, used in this Section 7. For compression members, this includes the local and distortional and overall buckling loads specified in Clause 7.2.1. For members subject to bending, this includes the local and distortional and overall buckling moments specified in Clause 7.2.2. For members subject to shear, this includes the elastic shear buckling force specified in Clause 7.2.3. For a given compression member or members subject to bending, all three modes may not exist. In this case, the non-existent mode shall be ignored in the calculations of Clauses 7.2.1 and 7.2.2.

NOTE: Appendix D provides simple expressions for elastic buckling stresses, moments and shears.

Accessed by UNIVERSITY OF SOUTH AUSTRALIA on 03 May 2019 (Document currency not guaranteed when printed)

COPYRIGHT

7.1.4 Deflection calculation

The bending deflection at any moment (M) due to nominal loads, shall be determined by reducing the gross second moment of area (I_g) to an effective second moment of area (I_{eff}) for deflection, using the following equation:

$$I_{eff} = I_g \left(\frac{M_n}{M} \right) \leq I_g \qquad \ldots 7.1.4$$

where

M_n = nominal flexural capacity specified in Clause 7.2.2, but with M_y replaced by M in all equations of Clause 7.2.2

M = moment due to nominal loads on member to be considered

$\leq M_y$

TABLE 7.1

LIMITS OF APPLICABILITY FOR DESIGN USING THE DIRECT STRENGTH METHOD

Criteria	Limiting variables	DSM prequalification limits
Stiffened element in compression [Figure 1.3(C)]	b_2/t	≤500
Edge stiffened element in compression [Figure 2.4.2(a)]	b/t	≤160
Unstiffened element in compression [Figure 2.3.1(a)]	d/t	≤60
Stiffened element in bending [Figure 2.2.3(a)]	b/t	≤200 for unstiffened web ≤260 for bearing stiffener ≤300 for bearing and intermediate stiffener
Inside bend radius	r_{min}/t	≤20
Simple edge stiffener overall length/overall width ratio	$\frac{(d + r_{min} + t)}{(b + 2\,r_{min} + 2\,t)}$	≤0.7
Maximum number of intermediate stiffeners in b_2	n_f	4
Maximum number of intermediate stiffeners in b	n_{fe}	2
Maximum number of intermediate stiffeners in web	n_w	4
Yield stress used in design	f_y	≤655 MPa

7.2 MEMBERS

7.2.1 Design of compression members

7.2.1.1 *General*

The nominal member capacity of a member in compression (N_c) shall be the minimum of the nominal member capacity of a member in compression (N_{ce}) for flexural, torsional or flexural-torsional buckling, the nominal member capacity of a member in compression (N_{cl}) for local buckling and the nominal member capacity of a member in compression (N_{cd}) for distortional buckling as specified in Clauses 7.2.1.2, 7.2.1.3 and 7.2.1.4. For compression members meeting the geometric requirements of Table 7.1, ϕ_c shall be taken as 0.85. For all other compression members, ϕ_c specified in Clause 1.6.3(c)(i) applies.

Accessed by UNIVERSITY OF SOUTH AUSTRALIA on 03 May 2019 (Document currency not guaranteed when printed)

COPYRIGHT

7.2.1.2 *Flexural, torsional or flexural-torsional buckling*

7.2.1.2.1 *Compression members without holes*

The nominal member capacity of a member in compression (N_{ce}) for flexural, torsional or flexural-torsional buckling shall be calculated as follows:

For $\lambda_c \leq 1.5$: $$N_{ce} = \left(0.658^{\lambda_c^2}\right) N_y \quad \text{. . . 7.2.1.2(1)}$$

For $\lambda_c > 1.5$: $$N_{ce} = \left(\frac{0.877}{\lambda_c^2}\right) N_y \quad \text{. . . 7.2.1.2(2)}$$

where

λ_c = non-dimensional slenderness used to determine N_{ce}

$$= \sqrt{\frac{N_y}{N_{oc}}} \quad \text{. . . 7.2.1.2(3)}$$

N_{oc} = least of the elastic compression member buckling load in flexural, torsional and flexural-torsional buckling

$$= A_g f_{oc} \quad \text{. . . 7.2.1.2(4)}$$

N_y = nominal yield capacity of the member in compression

$$= A_g f_y \quad \text{. . . 7.2.1.2(5)}$$

f_{oc} may be determined in accordance with a rational elastic buckling analysis or Paragraph D1.1.1, Appendix D

7.2.1.2.2 *Compression members with holes*

The nominal member capacity of a member in compression (N_{ce}) for flexural, torsional or flexural-torsional buckling of compression members with holes shall be calculated in accordance with Clause 7.2.1.2.1 except that f_{oc} shall be determined including the influence of holes.

NOTE: For the inclusion of the influence of holes on the elastic buckling stress (f_{oc}), Paragraph D1.1.2, Appendix D, may be used.

7.2.1.3 *Local buckling*

7.2.1.3.1 *Compression members without holes*

The nominal member capacity of a member in compression (N_{cl}) for local buckling shall be calculated as follows:

For $\lambda_l \leq 0.776$: $$N_{cl} = N_{ce} \quad \text{. . . 7.2.1.3(1)}$$

For $\lambda_l > 0.776$: $$N_{cl} = \left[1 - 0.15\left(\frac{N_{ol}}{N_{ce}}\right)^{0.4}\right]\left(\frac{N_{ol}}{N_{ce}}\right)^{0.4} N_{ce} \quad \text{. . . 7.2.1.3(2)}$$

where

λ_l = non-dimensional slenderness used to determine N_{cl}

$$= \sqrt{\frac{N_{ce}}{N_{ol}}} \quad \text{. . . 7.2.1.3(3)}$$

N_{ol} = elastic local buckling load

$$= A_g f_{ol} \quad \text{. . . 7.2.1.3(4)}$$

f_{ol} = elastic local buckling stress determined in accordance with a rational elastic buckling analysis or Paragraph D1.3, Appendix D

Accessed by UNIVERSITY OF SOUTH AUSTRALIA on 03 May 2019 (Document currency not guaranteed when printed)

COPYRIGHT

7.2.1.3.2 *Compression members with holes*

The nominal member capacity of a member with holes in compression (N_{cl}) for local buckling shall be calculated in accordance with Clause 7.2.1.3.1 except that f_{ol} shall be determined including the influence of holes and—

$$N_{cl} \leq N_{ynet} \qquad \text{. . . 7.2.1.3(5)}$$

where

N_{ynet} = member yield capacity on net cross-section

$$= A_{net} f_y \qquad \text{. . . 7.2.1.3(6)}$$

A_{net} = net area of cross-section at the location of the hole

NOTE: For inclusion of the influence of holes on the elastic local buckling stress (f_{ol}), Paragraph D1.3.2, Appendix D, may be used.

7.2.1.4 *Distortional buckling*

7.2.1.4.1 *Compression members without holes*

The nominal member capacity of a member in compression (N_{cd}) for distortional buckling shall be calculated as follows:

$$\text{For } \lambda_d \leq 0.561\text{: } N_{cd} = N_y \qquad \text{. . . 7.2.1.4(1)}$$

$$\text{For } \lambda_d > 0.561\text{: } N_{cd} = \left[1 - 0.25\left(\frac{N_{od}}{N_y}\right)^{0.6}\right]\left(\frac{N_{od}}{N_y}\right)^{0.6} N_y \qquad \text{. . . 7.2.1.4(2)}$$

where

λ_d = non-dimensional slenderness used to determine N_{cd}

$$= \sqrt{\frac{N_y}{N_{od}}} \qquad \text{. . . 7.2.1.4(3)}$$

N_{od} = elastic distortional compression member buckling load

$$= A_g f_{od} \qquad \text{. . . 7.2.1.4(4)}$$

f_{od} = elastic distortional buckling stress, determined in accordance with a rational elastic buckling analysis or Paragraph D1.2, Appendix D

7.2.1.4.2 *Compression members with holes*

The nominal member capacity of a member with holes in compression (N_{cd}) for distortional buckling shall be calculated in accordance with Clause 7.2.1.4.1, except f_{od} shall be determined including the influence of hole(s), and if $\lambda_d \leq \lambda_{d2}$ then:

$$\text{For } \lambda_d \leq \lambda_{d1}\text{: } \quad N_{cd} = N_{ynet} \qquad \text{. . . 7.2.1.4(5)}$$

$$\text{For } \lambda_{d1} < \lambda_d \leq \lambda_{d2}\text{: } \quad N_{cd} = N_{ynet} - \left(\frac{N_{ynet} - N_{d2}}{\lambda_{d2} - \lambda_{d1}}\right)(\lambda_d - \lambda_{d1}) \qquad \text{. . . 7.2.1.4(6)}$$

where

λ_d = non-dimensional slenderness used to determine N_{cd} . . . 7.2.1.4(7)

$$= \sqrt{\frac{N_y}{N_{od}}}$$

Accessed by UNIVERSITY OF SOUTH AUSTRALIA on 03 May 2019 (Document currency not guaranteed when printed)

COPYRIGHT

$$\lambda_{d1} = 0.561\left(\frac{N_{ynet}}{N_y}\right) \quad \text{. . . 7.2.1.4(8)}$$

$$\lambda_{d2} = 0.561\left(14\left(\frac{N_y}{N_{ynet}}\right)^{0.4} - 13\right) \quad \text{. . . 7.2.1.4(9)}$$

$$N_{d2} = \left(1 - 0.25\left(\frac{1}{\lambda_{d2}}\right)^{1.2}\right)\left(\frac{1}{\lambda_{d2}}\right)^{1.2} N_y \quad \text{. . . 7.2.1.4(10)}$$

$$N_{od} = A_g f_{od} \quad \text{. . . 7.2.1.4(11)}$$

= elastic distortional buckling load including the influence of holes

N_y = nominal yield capacity given by Equation 7.2.1.2(5)

N_{ynet} = member yield capacity on net cross-section as given in Equation 7.2.1.3(6)

NOTE: For the inclusion of the influence of holes on the elastic buckling stress (f_{od}), Paragraph D1.2.2, Appendix D, may be used.

7.2.2 Design of members subject to bending

7.2.2.1 *General*

The nominal member moment capacity (M_b) shall be the minimum of the nominal member moment capacity (M_{be}) for lateral-torsional buckling, the nominal member moment capacity (M_{bl}) for local buckling and the nominal member moment capacity (M_{bd}) for distortional buckling as specified in Clauses 7.2.2.2, 7.2.2.3 and 7.2.2.4. For members subject to bending, meeting the geometric requirements of Clause 7.1.2, ϕ_b shall be taken as 0.90. For all other members subject to bending, ϕ_b specified in Clause 1.6.3(c)(i) applies.

7.2.2.2 *Lateral-torsional buckling*

7.2.2.2.1 *General*

The nominal member moment capacity (M_{be}) for lateral-torsional buckling shall be calculated in accordance with this Clause (7.2.2.2). The nominal capacity increase for inelastic reserve in lateral-torsional buckling is permitted for sections without holes in accordance with the additional rules in Clause 7.2.2.2.2.

7.2.2.2.2 *Beams without holes*

The nominal member moment capacity (M_{be}) for lateral-torsional buckling shall be calculated as follows:

For $M_o < 0.56M_y$: $M_{be} = M_o$ . . . 7.2.2.2(1)

For $2.78M_y \geq M_o \geq 0.56M_y$: $M_{be} = \frac{10}{9}M_y\left(1 - \frac{10M_y}{36M_o}\right)$ . . . 7.2.2.2(2)

For $M_o > 2.78\ M_y$: $M_{be} = M_y$ . . . 7.2.2.2(3)

where

M_o = elastic lateral-torsional buckling moment determined in accordance with a rational elastic buckling analysis or Paragraph D2.1, Appendix D

$$M_y = Z_f f_y \quad \text{. . . 7.2.2.2(4)}$$

where

Z_f = full section modulus of the extreme fibre at first yield

Accessed by UNIVERSITY OF SOUTH AUSTRALIA on 03 May 2019 (Document currency not guaranteed when printed)

COPYRIGHT

Inelastic reserve for lateral-torsional buckling shall be calculated as follows:

For $M_o > 2.78M_y$:

$$M_{be} = M_p - \left(M_p - M_y\right)\left(\frac{\left(\sqrt{\left(\frac{M_y}{M_o}\right)} - 0.23\right)}{0.37}\right) \leq M_p \qquad \text{. . . 7.2.2.2(5)}$$

where

M_o = elastic lateral-torsional buckling moment

M_y = yield moment [see Equation 7.2.2.2(4)]

M_p = plastic moment . . . 7.2.2.2(6)

= $S_f f_y$

S_f = plastic section modulus

7.2.2.2.3 *Beams with holes*

The nominal member moment capacity (M_{be}) for lateral-torsional buckling of beams with holes excluding inelastic reserve capacity shall be calculated in accordance with Clause 7.2.2.2.2 except M_o shall be determined including the influence of holes.

NOTE: For the inclusion of the influence of holes on the elastic buckling moment (M_o), Paragraph D2.1.2, Appendix D, may be used.

7.2.2.3 *Local buckling*

7.2.2.3.1 *General*

The nominal member moment capacity (M_{bl}) for local buckling shall be calculated in accordance with this Clause. The nominal capacity increase for inelastic reserve in local buckling is permitted for sections without holes in accordance with the additional rules in Clause 7.2.2.3.2.

7.2.2.3.2 *Beams without holes*

For $\lambda_l \leq 0.776$: $M_{bl} = M_{be}$ . . . 7.2.2.3(1)

For $\lambda_l > 0.776$: $$M_{bl} = \left[1 - 0.15\left(\frac{M_{ol}}{M_{be}}\right)^{0.4}\right]\left(\frac{M_{ol}}{M_{be}}\right)^{0.4} M_{be} \qquad \text{. . . 7.2.2.3(2)}$$

where

λ_l = non-dimensional slenderness used to determine M_{bl}

$$= \sqrt{\frac{M_{be}}{M_{ol}}} \qquad \text{. . . 7.2.2.3(3)}$$

M_{ol} = elastic local buckling moment

= $Z_f f_{ol}$ . . . 7.2.2.3(4)

f_{ol} = *elastic* local buckling stress determined in accordance with a rational elastic buckling analysis or Paragraph D2.3.1, Appendix D

Inelastic reserve for local buckling shall be calculated as follows:

For $\lambda_l \leq 0.776$ and $M_{be} > M_y$:

Accessed by UNIVERSITY OF SOUTH AUSTRALIA on 03 May 2019 (Document currency not guaranteed when printed)

COPYRIGHT

Sections symmetric about the axis of bending or sections with first yield in compression:

$$M_{bl} = M_y + \left(1 - \frac{1}{C_{yl}^2}\right)\left(M_p - M_y\right) \quad \text{. . . 7.2.2.3(5)}$$

Sections with first yield in tension:

$$M_{bl} = M_{yc} + \left(1 - \frac{1}{C_{yl}^2}\right)\left(M_p - M_{yc}\right) \le M_{yt3} \quad \text{. . . 7.2.2.3(6)}$$

where

$$\lambda_l = \sqrt{\frac{M_y}{M_{ol}}} \quad \text{. . . 7.2.2.3(7)}$$

M_{be} = nominal flexural capacity as defined in Clause 7.2.2.2.2

$$C_{yl} = \sqrt{\frac{0.776}{\lambda_l}} \le 3 \quad \text{. . . 7.2.2.3(8)}$$

M_{ol} = elastic local buckling moment

M_y = yield moment [see Equation 7.2.2.2(4)]

M_p = plastic moment

= $S_f f_y$ [see Equation 7.2.2.2(6)]

M_{yc} = moment at which yielding initiates in compression (after yielding in tension)

($M_{yc} = M_y$ may be used as a conservative approximation)

$$M_{yt3} = M_y + \left(1 - \frac{1}{C_{yt}^2}\right)\left(M_p - M_y\right) \quad \text{. . . 7.2.2.3(9)}$$

C_{yt} = ratio of maximum tension strain to yield strain

= 3.0

7.2.2.3.3 *Beams with holes*

The nominal member moment capacity (M_{bl}) for local buckling of beams with holes excluding inelastic reserve capacity shall be calculated in accordance with Clause 7.2.2.3.2 except M_{ol} shall be determined including the influence of holes.

$$M_{bl} \le M_{ynet}$$

where

M_{ynet} = member yield moment of net cross-section

$$= Z_{fnet} f_y \quad \text{. . . 7.2.2.3(10)}$$

where

Z_{fnet} = net section modulus referenced to the extreme fibre at yield

NOTE: For the inclusion of the influence of holes on the elastic buckling moment (M_{ol}), Paragraph D2.3.2, Appendix D, may be used.

7.2.2.4 *Distortional buckling*

7.2.2.4.1 *General*

The nominal member moment capacity (M_{bd}) for distortional buckling shall be calculated in accordance with this Clause (7.2.2.4). The nominal capacity increase for inelastic reserve in

Accessed by UNIVERSITY OF SOUTH AUSTRALIA on 03 May 2019 (Document currency not guaranteed when printed)

COPYRIGHT

local buckling is permitted for sections without holes in accordance with the additional rules in Clause 7.2.2.4.2.

7.2.2.4.2 *Beams without holes*

For $\lambda_d \le 0.673$: $M_{bd} = M_y$ . . . 7.2.2.4(1)

For $\lambda_d > 0.673$: $M_{bd} = \left[1 - 0.22\left(\frac{M_{od}}{M_y}\right)^{0.5}\right]\left(\frac{M_{od}}{M_y}\right)^{0.5} M_y$ . . . 7.2.2.4(2)

where

λ_d = non-dimensional slenderness used to determine M_{bd}

$$= \sqrt{\frac{M_y}{M_{od}}} \quad \text{. . . 7.2.2.4(3)}$$

M_{od} = elastic distortional buckling moment

$$= Z_f f_{od} \quad \text{. . . 7.2.2.4(4)}$$

f_{od} = elastic distortional buckling stress, determined in accordance with a rational elastic buckling analysis or Paragraph D2.2, Appendix D

Inelastic reserve for distortional buckling shall be calculated using—

For $\lambda_d \le 0.673$:

Sections symmetric about the axis of bending or sections with first yield in compression:

$$M_{bd} = M_y + \left(1 - \frac{1}{c_{yd}^2}\right)\left(M_p - M_y\right) \quad \text{. . . 7.2.2.4(5)}$$

Sections with first yield in tension:

$$M_{bd} = M_{yc} + \left(1 - \frac{1}{c_{yd}^2}\right)\left(M_p - M_{yc}\right) \le M_{yt3} \quad \text{. . . 7.2.2.4(6)}$$

where

$$\lambda_d = \sqrt{\frac{M_y}{M_{od}}} \quad \text{. . . 7.2.2.4(7)}$$

$$c_{yd} = \sqrt{\frac{0.673}{\lambda_d}} \le 3 \quad \text{. . . 7.2.2.4(8)}$$

M_{od} = elastic distortional buckling moment

M_y = yield moment [see Equation 7.2.2.2(4)]

M_p = plastic moment

= $S_f f_y$ [see Equation 7.2.2.2(6)]

M_{yc} = moment at which yielding initiates in compression (after yielding in tension)

($M_{yc} = M_y$ may be used as a conservative approximation)

$$M_{yt3} = M_y + \left(1 - \frac{1}{C_{yt}^{\ 2}}\right)\left(M_p - M_y\right) \quad \text{. . . 7.2.2.4(9)}$$

Accessed by UNIVERSITY OF SOUTH AUSTRALIA on 03 May 2019 (Document currency not guaranteed when printed)

COPYRIGHT

C_{yt} = ratio of maximum tension strain to yield strain

= 3.0

7.2.2.4.3 *Beams with holes*

The nominal member moment capacity of a member with holes (M_{cd}) for distortional buckling shall be calculated in accordance with Clause 7.2.2.4.2, except f_{od} shall be determined including the influence of hole(s), and if $\lambda_d \le \lambda_{d2}$ then:

For $\lambda_d \le \lambda_{d1}$: $M_{bd} = M_{ynet}$ . . . 7.2.2.4(10)

For $\lambda_{d1} < \lambda_d \le \lambda_{d2}$: $M_{bd} = M_{ynet} - \left(\dfrac{M_{ynet} - M_{d2}}{\lambda_{d2} - \lambda_{d1}}\right)(\lambda_d - \lambda_{d1})$ . . . 7.2.2.4(11)

where

λ_d = non-dimensional slenderness used to determine M_{cd}

$$= \sqrt{\frac{M_y}{M_{od}}} \quad \text{. . . 7.2.2.4(12)}$$

$$\lambda_{d1} = 0.673(M_{ynet}/M_y)^3 \quad \text{. . . 7.2.2.4(13)}$$

$$\lambda_{d2} = 0.673\left(1.7\left(\frac{M_y}{M_{ynet}}\right)^{2.7} - 0.7\right) \quad \text{. . . 7.2.2.4(14)}$$

$$M_{d2} = \left(1 - 0.22\left(\frac{1}{\lambda_{d2}}\right)\right)\left(\frac{1}{\lambda_{d2}}\right)M_y \quad \text{. . . 7.2.2.4(15)}$$

M_y = nominal yield capacity given by Equation 7.2.2.2(4)

M_{ynet} = member yield capacity on net cross-section as given in Equation 7.2.2.3(10)

M_{bd} ≤ (without holes as given in Clause 7.2.2.4.2)

NOTE: For the inclusion of the influence of holes on the elastic buckling stress (f_{od}), Paragraph D2.2, Appendix D, may be used.

7.2.3 Design of members subject to shear, and combined bending and shear

7.2.3.1 *General*

The nominal member shear capacity (V_v) shall be as specified in Clauses 7.2.3.2, 7.2.3.3 and 7.2.3.4. For shear members meeting the geometric requirements of Table 7.1, ϕ_v shall be taken as 0.90. For all other shear members, ϕ_v specified in Clause 1.6.3(c)(i) applies. For members in combined bending and shear, Clause 7.2.3.5 shall apply.

7.2.3.2 *Beams without transverse web stiffeners*

The nominal shear capacity, V_v, of beams without stiffeners shall be calculated as follows:

For $\lambda_v \le 0.815$:

$$V_v = V_y \quad \text{. . . 7.2.3(1)}$$

For $0.815 < \lambda_v \le 1.227$:

$$V_v = 0.815\sqrt{V_{cr}V_y} \quad \text{. . . 7.2.3(2)}$$

For $\lambda_v > 1.227$:

$$V_v = V_{cr} \quad \text{. . . 7.2.3(3)}$$

Accessed by UNIVERSITY OF SOUTH AUSTRALIA on 03 May 2019 (Document currency not guaranteed when printed)

COPYRIGHT

where

$$\lambda_v = \sqrt{\frac{V_y}{V_{cr}}} \qquad \text{. . . 7.2.3(4)}$$

V_y = yield shear force of section

$$= 0.6A_w f_y \qquad \text{. . . 7.2.3(5)}$$

where

A_w = area of *web* element

$$= ht \qquad \text{. . . 7.2.3(6)}$$

h = depth of flat portion of web measured along plane of web

t = web thickness

f_y = design yield stress

V_{cr} = elastic shear buckling force determined in accordance with a rational elastic buckling analysis or Paragraph D3, Appendix D

7.2.3.3 *Beams with transverse web stiffeners*

For a reinforced *web* with *web* stiffener spacing not exceeding twice the web depth, this section may be used to determine the nominal shear capacity, V_v, in lieu of Clause 7.2.3.2

For $\lambda_v \le 0.776$, $V_v = V_y$: . . . 7.2.3(7)

$$\text{For } \lambda_v > 0.776,\ V_v = \left[1 - 0.15\left(\frac{V_{cr}}{V_y}\right)^{0.4}\right]\left(\frac{V_{cr}}{V_y}\right)^{0.4} V_y \qquad \text{. . . 7.2.3(8)}$$

where

V_{cr} = elastic shear buckling force determined in accordance with a rational elastic buckling analysis or Paragraph D3, Appendix D

7.2.3.4 *Beams with holes in the web*

For beams with holes in the web, Clause 3.3.4.2 shall be used.

7.2.3.5 *Combined bending and shear*

For beams with unstiffened webs, the design bending moment (M^*) and the design shear force (V^*) shall satisfy—

$$\left(\frac{M^*}{\phi_b M_s}\right)^2 + \left(\frac{V^*}{\phi_v V_v}\right)^2 \le 1.0 \qquad \text{. . . 7.2.3(9)}$$

For beams with transverse web stiffeners, the design bending moment (M^*) shall satisfy—

$$M^* \le \phi_b M_b \qquad \text{. . . 7.2.3(10)}$$

The design shear force (V^*) shall satisfy—

$$V^* \le \phi_v V_v \qquad \text{. . . 7.2.3(11)}$$

$$\text{If } \left(\frac{M^*}{\phi_b M_s}\right) > 0.5 \text{ and } \left(\frac{V^*}{\phi_v V_v}\right) > 0.7$$

then M^* and V^* shall satisfy—

Accessed by UNIVERSITY OF SOUTH AUSTRALIA on 03 May 2019 (Document currency not guaranteed when printed)

COPYRIGHT

$$0.6\left(\frac{M^*}{\phi_b M_s}\right)+\left(\frac{V^*}{\phi_v V_v}\right)\leq 1.3 \qquad \text{. . . 7.2.3(12)}$$

where

M_s = nominal section moment capacity about the centroidal axes for a globally braced member, for members without transverse stiffeners determined from Clause 7.2.2.3 with $M_{be} = M_y$ and for members with transverse stiffeners as the lesser of M_{be} from Clause 7.2.2.3 with $M_{be} = M_y$ and M_{bd} from Clause 7.2.2.4

V_v = nominal shear capacity when shear alone exists determined in accordance with Clause 7.2.3

M_b = nominal member moment capacity when bending alone exists determined in accordance with Clause 7.2.2

7.2.4 Design of members subject to combined axial compression and bending

The design axial compression (N^*), and the design bending moments $\left(M_x^*\right)$ and $\left(M_y^*\right)$ about the *x*- and *y*-axes of the gross section, respectively, shall satisfy the following:

$$\frac{N^*}{\phi_c N_c}+\frac{M_x^*}{\phi_b M_{bx}}+\frac{M_y^*}{\phi_b M_{by}}\leq 1.0 \qquad \text{. . . 7.2.4}$$

where

N_c = nominal member capacity of the member in compression determined in accordance with Clause 7.2.1

M_x^*, M_y^* = design bending moment about the *x*- and *y*-axes of the gross section, respectively including the second order moments in accordance with Paragraph B3. If first order moments are used, then the combined axial compression and bending interaction equations in Clause 3.5.1 shall be used in lieu of Equation 7.2.4

M_{bx}, M_{by} = nominal member moment capacity about the *x*- and *y*-axes, respectively, determined in accordance with Clause 7.2.2

ϕ_b = capacity reduction factor for bending

= 0.90

ϕ_c = capacity reduction factor for members in compression

= 0.85

In addition, each individual ratio in Equation 7.2.4 shall not exceed unity.

In the application of Equation 7.2.4 including second order moments, the effective lengths l_{ex}, l_{ey} shall be taken as the actual length L or the length between brace points.

7.2.5 Design of members subject to combined axial tension and bending

The design axial tension (N^*), and the required bending moments $\left(M_x^*\right)$ and $\left(M_y^*\right)$ about the *x*- and *y*-axes of the gross section, respectively, shall satisfy the following:

(a) $$\frac{M_x^*}{\phi_b M_{bx}}+\frac{M_y^*}{\phi_b M_{by}}-\frac{N^*}{\phi_t N_t}\leq 1.0 \qquad \text{. . . 7.2.5(1)}$$

(b) $$\frac{N^*}{\phi_t N_t}+\frac{M_x^*}{\phi_b M_{sxf}}+\frac{M_y^*}{\phi_b M_{syf}}\leq 1.0 \qquad \text{. . . 7.2.5(2)}$$

Accessed by UNIVERSITY OF SOUTH AUSTRALIA on 03 May 2019 (Document currency not guaranteed when printed)

COPYRIGHT

where

N_t = nominal section capacity of the member in tension determined in accordance with Clause 3.2

M_{sxf}, M_{syf} = nominal section yield moment capacity of the full section about the x-axis and y-axis, respectively

$$= Z_{ft} f_y \qquad \text{. . . 7.2.5(3)}$$

Z_{ft} =section modulus of the full unreduced section for the extreme tension fibre about the appropriate axis

M_{bx}, M_{by} = nominal member moment capacity about the x- and y-axes, respectively, according to Clause 7.2.2

ϕ_b = capacity reduction factor for bending

= 0.90

ϕ_t = capacity reduction factor for members in tension

= 0.90

Accessed by UNIVERSITY OF SOUTH AUSTRALIA on 03 May 2019 (Document currency not guaranteed when printed)

COPYRIGHT

SECTION 8 TESTING

8.1 TESTING FOR DETERMINING MATERIAL PROPERTIES

8.1.1 Testing of unformed steel

Where the steels specified in Clause 1.5.1.1 are used or the yield stress of steel is required for the purpose of Clause 6.1.3, unformed steel properties shall be determined by tests in accordance with AS 1391.

Test specimens shall be taken longitudinally (long dimension of specimens in direction of rolling) from positions located one quarter of the coil width from either edge near the outer end of the coil.

8.1.2 Compression testing

Stub-column tests shall be made on flat-end specimens whose length is not less than three times the largest dimension of the section but no more than 20 times the least radius of gyration. If tests of ultimate compressive strength are used to determine yield stress for quality control purposes, the length of the section shall be not less than 15 times the least radius of gyration.

In making compression tests, the specimen in the testing machine shall be centred so that the load is applied concentrically with respect to the centroidal axis of the section.

NOTE: For further information regarding compression testing, reference may be made to AISI Standard Test Method S902, test for determining the effective area of cold-formed steel compression members.

8.1.3 Testing of full sections

This Clause applies only to the determination of the mechanical properties of a fully formed section for the purposes specified in Clause 1.5.1.2. It shall not be interpreted as forbidding the use of test procedures instead of the usual design calculations.

The procedure shall be as follows:

(a) Determine the tensile yield stress (f_y) in accordance with AS 1391.

(b) Determine the compressive yield stress (f_y) by means of compression tests as specified in Clause 8.1.2.

(c) Where the principal effect of the loading to which the member will be subjected in service is to produce bending stresses, determine the yield stress for the flanges. In determining the yield stress, carry out tests on specimens cut from the section. Each such specimen shall consist of one complete flange plus a portion of the web of such flat width ratio so that the section is fully effective.

(d) For acceptance and control purposes, make two full section tests from formed material lots. Material lots shall be considered as parcels or heats, as defined in the relevant Standard's material specification in the Clauses on selection and preparation of test samples for mechanical testing.

(e) Use either tension or compression tests for routine acceptance and control purposes, provided it is demonstrated that such tests reliably indicate the yield stress of the section when subjected to the kind of stress under which the member is to be used.

Accessed by UNIVERSITY OF SOUTH AUSTRALIA on 03 May 2019 (Document currency not guaranteed when printed)

COPYRIGHT

8.1.4 Testing of flat coupons of formed members

8.1.4.1 *Assessment of strength increase*

Tests for determining material properties of flat coupons of formed members and material properties of unformed steel for the purpose of assessing strength increase resulting from cold-forming, as specified in Clause 1.5.1.2, shall be made as follows:

(a) The yield stress of flats (f_{yf}) shall be established by means of a weighted average of the yield stresses of standard tensile coupons taken longitudinally from the major flat portions of a cold-formed member. The weighted average shall be the sum of the products of the average yield stress for each major flat portion times its cross-sectional area, divided by the total area of the major flats in the cross-section.

(b) If the actual yield stress of the unformed steel exceeds the specified minimum yield stress, the yield stress of the flats (f_{yf}) shall be adjusted by multiplying the test values by the ratio of the specified minimum yield stress to the actual yield stress of the unformed steel.

8.1.4.2 *Design properties*

Tests for determining material properties of flat coupons of formed members for the purpose of establishing design properties of the formed members, as specified in Clause 1.5.1.2, shall be made as follows:

(a) The test specimens shall be taken longitudinally from a major flat portion of the section, midway between corners (excluding the corners) or midway between a corner and a free edge (excluding the corner).

(b) The test specimen shall be taken from the flat portion with the least strength increase from cold-forming.

(c) The minimum yield stress (f_y) and the minimum tensile strength (f_u) used in design shall be determined in accordance with AS 1391.

8.1.5 Testing for determining section properties

Flexural section properties, e.g. second moment of area of the cross-section and section modulus, may be determined by tests.

Test specimens prone to lateral displacement shall be suitably braced. The loading apparatus and bracing shall not impose unintentional restraints on the specimen. The loading devices shall be accurately calibrated.

The specimens shall be tested in bending with simply supported spans.

The cross-sectional dimensions of test specimens shall be as close as practicable to nominal dimensions, which are the basis for calculated properties. Where a discrepancy exists, the section properties from tests shall be adjusted by the ratios of nominal to actual dimensions.

The true deflections shall be separated from other causes of specimen movement under load, such as specimen settlement at support, and movement of test frame.

8.1.6 Testing of single-point fastener connections

The testing of single-point fastener connections shall be in accordance with Appendix F.

8.2 TESTING FOR ASSESSMENT OR VERIFICATION

8.2.1 General

This Clause applies to the testing of full size units of complete structures, parts of structures, individual members or connections. These include prototype testing or testing to establish a structural model for predicting strength. This Clause (8.2) applies to testing where the coefficient of variation of structural characteristics (V_{sc}) is less than 30%.

Accessed by UNIVERSITY OF SOUTH AUSTRALIA on 03 May 2019 (Document currency not guaranteed when printed)

COPYRIGHT

NOTES:

1 Testing of a product for which there is a standard test method should be in accordance with the appropriate Standard (e.g. testing of sheet roof and wall cladding systems should be in accordance with AS/NZS 1562.1).

2 If the coefficient of variation of structural characteristics (V_{sc}) is greater than 30%, the test procedure and design model, where applicable, should be reviewed.

8.2.2 Applications

8.2.2.1 *Prototype*

Outcomes from prototype testing shall apply only to the prototype (see Clause 8.3.1).

There shall be no variation from the prototype.

8.2.2.2 *Strength prediction model*

Outcomes from the strength prediction model shall apply only for the ranges of tested parameters (see Clause 8.3.2). The tests shall be on full size units and no extrapolation is permitted.

8.3 COEFFICIENT OF VARIATION OF STRUCTURAL CHARACTERISTICS

8.3.1 Prototype

The coefficient of variation of structural characteristics (V_{sc}) refers to the variability of the total population of the production units. This includes the total population variation due to fabrication (V_f) and material (V_m). It may be approximated by—

$$V_{sc} = \sqrt{V_f^2 + V_m^2} \qquad \text{. . . 8.3.1}$$

Unless a comprehensive test program used to establish (V_{sc}) shows otherwise, the value of (V_{sc}) shall be not less than the following:

(a) Member or connector strength: ..... 10%.

(b) Connection strength: ..... 20%.

(c) Assembly strength: ..... 20%.

(d) Member stiffness: ..... 5%.

(e) Assembly stiffness: ..... 10%.

NOTE: Where materials are sourced from multiple suppliers, the coefficient of variation of material properties (e.g. thickness, strength, diameter etc.) should be assessed to ensure the above values are applicable.

8.3.2 Strength prediction model

The coefficient of variation of structural characteristics (V_{sc}) refers to the variability of the total population of the production units. This includes the total population variation due to fabrication (V_t), material (V_m) and variation of the prediction (V_t). It may be approximated by—

$$V_{sc} = \sqrt{V_f^2 + V_m^2 + V_t^2} \qquad \text{. . . 8.3.2}$$

The value of V_t shall be established to reflect the difference between the test results and the strength prediction model. The combined value of V_f and V_m shall be not less than those given for V_{sc} in Clause 8.3.1

Accessed by UNIVERSITY OF SOUTH AUSTRALIA on 03 May 2019 (Document currency not guaranteed when printed)

COPYRIGHT

8.4 DESIGN VALUES

8.4.1 Prototype

The design value (R_d) for a specific product or assembly shall satisfy either—

$$R_d = \left(\frac{R_{min}}{k_{t-min}} \right) \quad \text{. . . 8.4.1(1)}$$

or

$$R_d = \left(\frac{R_{ave}}{k_{t\text{-}ave}} \right) \quad \text{. . . 8.4.1(2)}$$

where

R_{min} = minimum value of the test results

R_{ave} = average value of the test results

$k_{t\text{-}min}$ = sampling factor as given in Table 8.4.1(A)

$k_{t\text{-}ave}$ = sampling factor as given in Table 8.4.1(B)

NOTES:

1 Wherever possible, the minimum number of tests should be 3 for members and assemblies and 10 for connectors.

2 When applying this method, ϕ is taken as 1.0.

3 The requirements of this Clause for prototype design values are reproduced with modification, from NASH Standard—*Residential and Low-rise Steel Framing, Part 1: Design Criteria*, with permission.

TABLE 8.4.1(A)

SAMPLING FACTOR ($k_{t\text{-}min}$) FOR USE WITH THE MINIMUM VALUE OF THE TEST RESULTS

No. of tests	Coefficient of variation of structural characteristics (V_{sc})					
	5%	10%	15%	20%	25%	30%
1	1.20	1.46	1.79	2.21	2.75	3.45
2	1.17	1.38	1.64	1.96	2.36	2.86
3	1.15	1.33	1.56	1.83	2.16	2.56
4	1.15	1.30	1.50	1.74	2.03	2.37
5	1.13	1.28	1.46	1.67	1.93	2.23
7	1.11	1.23	1.38	1.56	1.76	1.99
10	1.10	1.21	1.34	1.49	1.66	1.85
20	1.06	1.13	1.21	1.29	1.39	1.50

This Table is reproduced with modification, from NASH Standard—*Residential and Low-rise Steel Framing, Part 1: Design Criteria*, with permission.

Accessed by UNIVERSITY OF SOUTH AUSTRALIA on 03 May 2019 (Document currency not guaranteed when printed)

COPYRIGHT

TABLE 8.4.1(B)

SAMPLING FACTOR ($k_{t\text{-ave}}$) FOR USE WITH THE AVERAGE VALUE OF THE TEST RESULTS

No. of tests	Coefficient of variation of structural characteristics (V_{sc})					
	5%	10%	15%	20%	25%	30%
1	1.20	1.46	1.79	2.21	2.75	3.45
2	1.18	1.39	1.64	2.01	2.44	2.98
3	1.17	1.37	1.62	1.93	2.33	2.80
4	1.16	1.35	1.59	1.88	2.25	2.69
5	1.15	1.34	1.57	1.85	2.20	2.62
7	1.15	1.32	1.54	1.81	2.14	2.53
10	1.14	1.31	1.51	1.77	2.07	2.45
20	1.13	1.29	1.47	1.70	1.98	2.32
100	1.11	1..25	1.42	1.62	1.86	2.15

This Table is reproduced with modification, from NASH Standard—*Residential and Low-rise Steel Framing, Part 1: Design Criteria*, with permission.

8.4.2 Strength prediction model

8.4.2.1 *General method*

The strength prediction model is of the form—

$$R = \left(k_m k_f k_t R_N\right) \qquad \text{. . . 8.4.2.1}$$

where

R_N =nominal design strength

k_m =factor to account for variation in material properties

k_f =factor to account for variation in fabrication

k_t =factor to account for the accuracy of the prediction

An assessment of the mean value and the coefficient of variation of (R/R_N) are required to derive the capacity reduction factor ϕ to be used.

The capacity reduction factor (ϕ) shall be determined to satisfy the verification method BV1 of the National Construction Code

8.4.2.2 *Simplified method*

NOTE: The simplified method is reproduced, with modification, from NASH Standard—*Residential and Low-rise Steel Framing, Part 1: Design Criteria* with permission.

When testing is conducted for a range of specific parameters to establish design values for a specific product and the method of Clause 8.3.1 is used to establish the design values, then it is permissible to interpolate the results for that parameter provided that there is no change in the limit state within the interpolating range. Extrapolation shall not be used outside of the tested parameters.

NOTE: This method assumes a linear relationship between the strength and the parameter involved.

Accessed by UNIVERSITY OF SOUTH AUSTRALIA on 03 May 2019 (Document currency not guaranteed when printed)

COPYRIGHT

SECTION 9 FIRE DESIGN

9.1 REQUIREMENTS

This Section applies to the design of cold-formed steel building members such as beams/columns or floors/load-bearing walls that are required to have a fire resistance level (FRL) based on structural adequacy.

Since thin-walled cold-formed steel structural members have a high exposed surface area to mass ratio, the temperature development in these members is likely to be rapid and high. Hence they are often located within or protected by fire-resistant barriers when they are required to have a FRL. This Section applies to such protected cold-formed steel structural members.

The protected cold-formed steel structural members shall be designed to have a period of structural adequacy (PSA) equal to or greater than the required FRL. The PSA shall be determined in accordance with Clause 9.3, using the elevated temperature mechanical properties of cold-formed steels as specified in Clause 9.4 and the temperature–time relationship of cold-formed steel structural members in the standard fire based on Clause 9.7.

Connections shall be designed for fire in accordance with Clause 9.9.

9.2 DEFINITIONS

For the purposes of this Section, the definitions below apply.

9.2.1 Fire resistance level (FRL)

The fire resistance period for structural adequacy only, in minutes, which is required to be attained in the standard fire test.

9.2.2 Load ratio

The ratio of the design action on the member under the design load for fire specified in AS/NZS 1170.1 to the design capacity of the member at ambient temperature.

9.2.3 Period of structural adequacy (PSA)

The time in minutes, for the member to reach the limit state of structural adequacy in the standard fire test.

9.2.4 Prototype

A test specimen representing a cold-formed steel structural member and its fire protection system in the standard fire test.

9.2.5 Standard fire test

The fire resistance test specified in AS 1530.4.

9.2.6 Structural adequacy

The ability of the member in the standard fire test to carry the applied test load determined based on the member design action for fire specified in AS/NZS 1170.1.

9.3 DETERMINATION OF THE PERIOD OF STRUCTURAL ADEQUACY

The period of structural adequacy (PSA) shall be determined using one of the following methods:

Accessed by UNIVERSITY OF SOUTH AUSTRALIA on 03 May 2019 (Document currency not guaranteed when printed)

COPYRIGHT

(a) By direct application of a single standard fire test in accordance with Clause 9.8.

(b) By simple calculations using the following two steps:

(i) Determine the limiting temperature of cold-formed steel structural member in accordance with Clause 9.6.

(ii) Determine the PSA as the time from the start of the standard fire test to the time at which the limiting steel temperature is reached by using the temperature–time relationship determined in accordance with Clause 9.7.

(c) By member capacity calculations at elevated temperatures in accordance with advanced structural analysis or Clause 9.5, based on the following two steps:

(i) Determine the load-bearing capacity of cold-formed steel structural member at a time equal to FRL in the standard fire test by using its temperature–time relationship obtained in accordance with Clause 9.7 and the elevated temperature mechanical properties in accordance with Clause 9.4.

(ii) The load-bearing capacity thus determined shall be equal to or greater than the design action on the member under the design load for fire. Alternatively, determine the time at which the above condition is met, which is PSA.

(d) Based on fire test results of similar cold-formed steel structural members and/or the use of advanced thermal and structural analyses. The methods in Appendix B shall be used for elevated temperature exposure by including the elevated temperature effects on the mechanical and thermal properties of steel as specified in Clause 9.4 and thermal deformations (if any). Advanced structural analysis shall simulate the behaviour of the cold-formed steel structural member restrained by its protection systems through the inclusion of buckling and non-linear material and geometric effects when exposed to the required elevated temperature–time exposure. Advanced thermal analysis based on established heat transfer principles shall be used to determine the temperature–time relationships for the protected cold-formed structural steel member exposed to the standard fire time-temperature curve on one side using the elevated temperature thermal properties of steel and protective materials. Advanced analyses shall be validated using representative standard fire test results.

9.4 ELEVATED TEMPERATURE MECHANICAL AND THERMAL PROPERTIES

9.4.1 General

Elevated temperature mechanical properties of cold-formed steels depend on the chemical composition, level of cold working and associated manufacturing processes. This Section includes the predictive equations for cold-formed steels to AS 1397. G450 grade and above are considered as high strength steels. For unidentified steels, elevated temperature tensile tests shall be undertaken.

9.4.2 Variation of yield stress with temperature

The influence of temperature (T) on the yield stress is defined by a reduction factor $\left(\frac{f_{y,T}}{f_{y,20}}\right)$ as follows. This relationship is shown in Figure 9.4.2.

For high strength steels to AS 1397:

$$20^\circ\text{C} \le T < 300^\circ\text{C} \quad \frac{f_{y,T}}{f_{y,20}} = -0.000179T + 1.00358 \qquad \text{. . . 9.4.2(1)}$$

$$300^\circ\text{C} \le T < 600^\circ\text{C} \quad \frac{f_{y,T}}{f_{y,20}} = -0.0028T + 1.79 \qquad \text{. . . 9.4.2(2)}$$

Accessed by UNIVERSITY OF SOUTH AUSTRALIA on 03 May 2019 (Document currency not guaranteed when printed)

COPYRIGHT

$$600^\circ\text{C} \le T < 800^\circ\text{C} \quad \frac{f_{y,T}}{f_{y,20}} = -0.0004T + 0.35 \qquad \text{. . . 9.4.2(3)}$$

For low strength steels to AS 1397:

$$20^\circ\text{C} \le T < 200^\circ\text{C} \quad \frac{f_{y,T}}{f_{y,20}} = -0.0005T + 1.01 \qquad \text{. . . 9.4.2(4)}$$

$$200^\circ\text{C} \le T < 800^\circ\text{C} \quad \frac{f_{y,T}}{f_{y,20}} = 25\left(1.16 - T^{0.022}\right) \qquad \text{. . . 9.4.2(5)}$$

where

$f_{y,T}$ = yield stress of steel at T°C

$f_{y,20}$ = yield stress of steel at 20°C

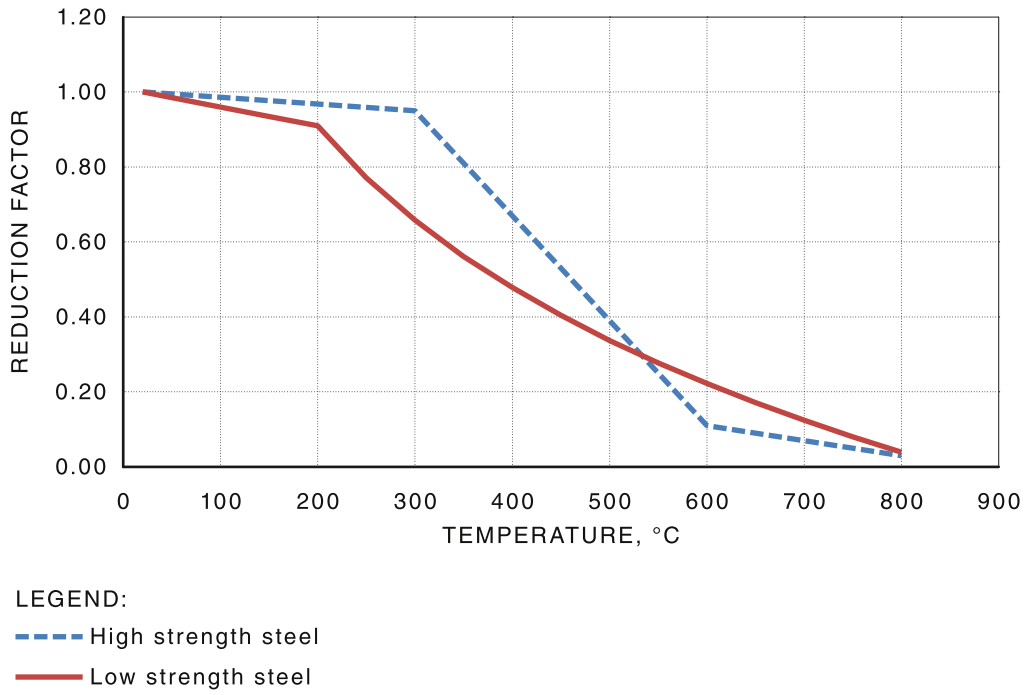

FIGURE 9.4.2 VARIATION OF YIELD STRESS OF STEEL WITH TEMPERATURE

9.4.3 Variation of modulus of elasticity with temperature

The influence of temperature (T) on the modulus of elasticity is defined by a reduction factor $\left(\frac{E_T}{E_{20}}\right)$ as follows. This relationship is shown in Figure 9.4.3.

For all steels to AS 1397:

$$20^\circ\text{C} \le T < 300^\circ\text{C} \quad \frac{E_T}{E_{20}} = -0.000835T + 1.0167 \qquad \text{. . . 9.4.3(1)}$$

$$200^\circ\text{C} < T \le 800^\circ\text{C} \quad \frac{E_T}{E_{20}} = -0.00135T + 1.1201 \qquad \text{. . . 9.4.3(2)}$$

Accessed by UNIVERSITY OF SOUTH AUSTRALIA on 03 May 2019 (Document currency not guaranteed when printed)

COPYRIGHT

where

E_T = modulus of elasticity of steel at T°C

E_{20} = modulus of elasticity of steel at 20°C

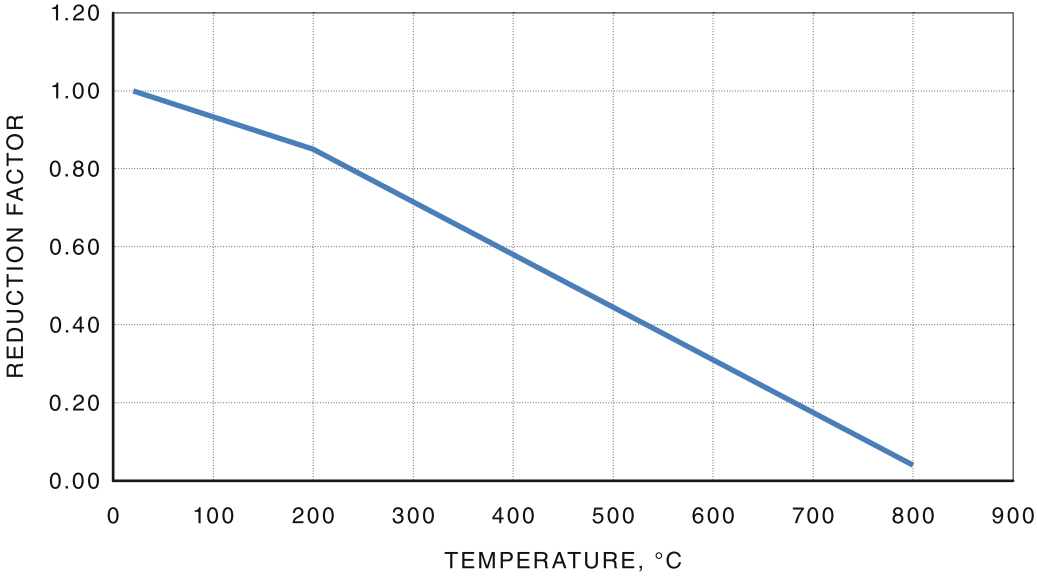

FIGURE 9.4.3 VARIATION OF MODULUS OF ELASTICITY WITH TEMPERATURE

9.4.4 Variation of stress-strain relationship with temperature

The influence of temperature (T) on the stress-strain relationship for cold-formed steels shall be taken as follows. For low strength steels at 100°C and 200°C with a well-defined yield point, the elastic-perfect plastic material model is recommended as follows:

$$\varepsilon_T = \frac{f_T}{E_T} + \beta\left(\frac{f_{y,T}}{E_T}\right)\left(\frac{f_T}{f_{y,T}}\right)^{\eta T} \qquad \text{. . . 9.4.4(1)}$$

where

ε_T = strain corresponding to a given stress f_T at temperature (T)

E_T and $f_{y,T}$ = modulus of elasticity and yield stress at temperature (T), respectively, and

η_T and β are two parameters

For high strength steels to AS 1397: 20°C ≤ T ≤ 800°C

β = 0.86

$$\eta_T = -3.05 \times 10^{-7}T^3 + 0.0005T^2 - 0.2615T + 62.653 \qquad \text{. . . 9.4.4(2)}$$

For low strength steels to AS 1397: 300°C ≤ T ≤ 800°C

β = 1.5

$$\eta_T = 0.000138T^2 - 0.085468T + 19.212 \qquad \text{. . . 9.4.4(3)}$$

Accessed by UNIVERSITY OF SOUTH AUSTRALIA on 03 May 2019 (Document currency not guaranteed when printed)

COPYRIGHT

9.4.5 Variation of specific heat with temperature

The influence of temperature (T) on the specific heat (c_p) in J/kg°C shall be taken as follows:

$$20^\circ\text{C} \le T < 600^\circ\text{C} \quad c_p = 425 + 7.73\times10^{-1}T - 1.69\times10^{-3}T^2 + 2.22\times10^{-6}T^3 \qquad \text{. . . 9.4.5(1)}$$

$$600^\circ\text{C} \le T < 735^\circ\text{C} \quad c_p = 666 + \frac{13002}{(738 - T)} \qquad \text{. . . 9.4.5(2)}$$

$$735^\circ\text{C} \le T < 900^\circ\text{C} \quad c_p = 545 + \frac{17820}{(T - 731)} \qquad \text{. . . 9.4.5(3)}$$

$$900^\circ\text{C} \le T < 1200^\circ\text{C} \quad c_p = 650 \qquad \text{. . . 9.4.5(3)}$$

9.4.6 Variation of thermal conductivity with temperature

The influence of temperature (T) on the thermal conductivity (k) in W/m°C shall be taken as follows:

$$20^\circ\text{C} \le T < 800^\circ\text{C} \quad k = 54 - 3.33\times10^{-2}T \qquad \text{. . . 9.4.6(1)}$$

$$800^\circ\text{C} \le T \le 1200^\circ\text{C} \quad k = 27.3 \qquad \text{. . . 9.4.6(2)}$$

9.4.7 Variation of relative thermal elongation with temperature

The influence of temperature (T) on the relative thermal elongation $(\Delta l / l)$ shall be taken as follows, where Δl is the thermal elongation and l is the length at 20°C.

$$20^\circ\text{C} \le T < 750^\circ\text{C} \quad \frac{\Delta l}{l} = 1.2\times10^{-5}T + 0.4\times10^{-8}T^2 - 2.416\times10^{-4} \qquad \text{. . . 9.4.7(1)}$$

$$750^\circ\text{C} \le T < 860^\circ\text{C} \quad \frac{\Delta l}{l} = 1.1\times10^{-2} \qquad \text{. . . 9.4.7(2)}$$

$$860^\circ\text{C} \le T < 1200^\circ\text{C} \quad \frac{\Delta l}{l} = 2\times10^{-5}T - 6.2\times10^{-3} \qquad \text{. . . 9.4.7(3)}$$

9.5 DETERMINATION OF MEMBER CAPACITIES AT ELEVATED TEMPERATURES

9.5.1 Members subject to uniform temperature distributions

For members subject to uniform or near uniform temperature distributions in applications such as beams or columns, ambient temperature design capacity rules shall be used with appropriately reduced mechanical properties in accordance with Clause 9.4. For those made of steels with high levels of nonlinearity in the stress-strain curves at temperatures in the range of 400°C to 700°C, use other methods given in Clause 9.3 to calculate PSA [Methods (a) and (b)]. A high level of nonlinearity may be assumed when the ratio of proportional limit to yield stress is less than 0.75 and is present normally for low strength steels.

9.5.2 Members subject to non-uniform temperature distributions

The net eccentricity due to neutral axis shift and thermal bowing and their magnification effects shall be used in calculating the resulting bending moment on a wall stud.

NOTE: Appendix G gives guidance on the determination of the load-bearing capacity of cold-formed steel structural members used in floors or load-bearing walls at a time equal to FRL in the standard fire test by using its temperature-time relationship obtained in accordance with Clause 9.7 and the elevated temperature mechanical properties in accordance with Clause 9.4.

Accessed by UNIVERSITY OF SOUTH AUSTRALIA on 03 May 2019 (Document currency not guaranteed when printed)

COPYRIGHT

9.6 DETERMINATION OF LIMITING TEMPERATURE

The maximum temperature in the cross-section shall be used as the limiting temperature except in floor systems where the average temperature in the cross-section shall be used. Standard fire tests or advanced analyses as defined in Clause 9.3 or both shall be used to establish a relationship between limiting temperature and load ratio. For cold-formed steel structural members, a conservative limiting temperature of 350°C shall be used.

9.7 DETERMINATION OF TEMPERATURE-TIME RELATIONSHIPS FOR PROTECTED MEMBERS

The temperature-time relationship of protected cold-formed steel structural members shall be obtained from the standard fire test conducted in accordance with AS 1530.4 and be used without modification provided—

(a) the cold-formed steel structural member is the same as the prototype;

(b) the exposed surface area to mass ratio is equal or greater than that of the prototype;

(c) the fire protection system is equal to or superior to that of the prototype; and

(d) the fire exposure condition is the same as the prototype.

Alternatively, advanced thermal analysis as defined in Clause 9.3 of the cold-formed steel structural member and its fire protection system may be used to derive the temperature-time relationship, provided it has been previously validated using standard fire test data.

9.8 DETERMINATION OF PSA FROM THE STANDARD FIRE TEST

The period of structural adequacy (PSA) of cold-formed steel structural members shall be obtained from the standard fire test conducted in accordance with AS 1530.4 and may be used without modification provided—

(a) the cold-formed steel structural member is the same as the prototype;

(b) the exposed surface area to mass ratio is equal or less than that of the prototype;

(c) the fire protection system is equal to or superior to that of the prototype;

(d) the fire exposure condition is the same as the prototype;

(e) the support conditions are the same as the prototype and the restraints are not less favourable than those of the prototype; and

(f) the load ratio is less than or equal to that of the prototype.

9.9 CONNECTIONS

Connections shall be protected with the maximum thickness of fire protection material required for any of the members framing into the connection to achieve their respective FRLs. This thickness shall be maintained over all connection components.

Accessed by UNIVERSITY OF SOUTH AUSTRALIA on 03 May 2019 (Document currency not guaranteed when printed)

COPYRIGHT

APPENDIX A

NORMATIVE REFERENCES

(Normative)

The following documents are indispensable for the application of this Standard:

AS

1110	ISO metric hexagon bolts and screws—Product grades A and B
1110.1	Part 1: Bolts
1111	ISO metric hexagon bolts and screws—Product grade C
1111.1	Part 1: Bolts
1112	ISO metric hexagon nuts
1112.1	Part 1: Style 1—Product grades A and B
1112.2	Part 2: Style 2—Product grades A and B
1112.3	Part 3: Product grade C
1112.4	Part 4: Chamfered thin nuts—Product grades A and B
1170	Structural design actions
1170.4	Part 4: Earthquake actions in Australia
1275	Metric screw threads for fasteners
1391	Metallic materials—Tensile testing at ambient temperature
1397	Continuous hot-dip metallic coated steel sheet and strip—Coatings of zinc and zinc alloyed with aluminium and magnesium
1530	Methods for fire tests on building materials, components and structures
1530.4	Part 4: Fire-resistance tests for elements of construction
1562	Design and installation of sheet roof and wall cladding
1562.1	Part 1: Metal
3566	Self-drilling screws for the building and construction industries
3566.1	Part 1: General requirements and mechanical properties
3566.2	Part 2: Corrosion resistance requirements
4291	Mechanical properties of fasteners made of carbon steel and alloy steel
4291.1	Part 1: Bolts, screws and studs (Identical adoption of ISO 898-1:2013)

AS/NZS

1163	Cold-formed structural steel hollow sections
1170	Structural design actions
1170.0	Part 0: General principles
1170.1	Part 1: Permanent, imposed and other actions
1252	High strength steel fastener assemblies for structural engineering—Bolts, nuts and washers
1252.1	Part 1: Technical requirements
1554	Structural steel welding
1554.1	Part 1: Welding of steel structures
1554.2	Part 2: Stud welding (steel studs to steel)
1554.5	Part 5: Welding of steel structures subject to high levels of fatigue loading
1554.7	Part 7: Welding of sheet steel structures
1594	Hot-rolled steel flat products

Accessed by UNIVERSITY OF SOUTH AUSTRALIA on 03 May 2019 (Document currency not guaranteed when printed)

COPYRIGHT

AS/NZS
1595 Cold-rolled, unalloyed, steel sheet and strip

3678 Structural steel—Hot-rolled plates, floorplates and slabs

NZS
1170 Structural design actions
1170.5 Part 5: Earthquake actions—New Zealand

AISI
S901 Rotational-Lateral Stiffness Test Method for Beam-to-Panel Assemblies

ABCB Australian Building Codes Board
NCC National Construction Code

AWS
C1.1 Recommended Practices for Resistance Welding
C1.3 Recommended Procedure for Resistance Welding of Coated Low Carbon Steels

Industrial Fastener Institute (IFI)
IFI 114 Break mandrel blind rivets

National Association of Steelframed Housing (NASH)
NASH Standard—Residential and Low-rise Steel Framing
Part 1: Design Criteria
Part 2: Design Solutions

NOTE: The list of informative documents referenced in this Standard is provided in the Bibliography at the end of the document.

Accessed by UNIVERSITY OF SOUTH AUSTRALIA on 03 May 2019 (Document currency not guaranteed when printed)

COPYRIGHT

APPENDIX B

METHODS OF ANALYSIS

(Normative)

B1 GENERAL

This Appendix contains provisions for the structural analysis of cold-formed steel framing systems comprising braced frames, unbraced frames, portal frames, braced compression members, or combinations thereof. Clause 1.6.2 specifies conformance to AS/NZS 1170.0 for structural analysis and design. For the purpose of conforming to the requirements for the limit states of stability, strength and serviceability specified in AS/NZS 1170.0, the design action effects in a structure and its members and connections caused by the design loads shall be determined by structural analysis using one of the following methods:

(a) First order elastic analysis, in accordance with Paragraph B2.

(b) Second order elastic analysis, in accordance with Paragraph B3.

(c) Advanced analysis, in accordance with Paragraph B4.

Regular building structures may be analysed as a series of parallel two-dimensional substructures, the analysis being carried out in each of two directions at right angles, except when there is significant load redistribution between the substructures.

B2 FIRST ORDER ELASTIC ANALYSIS

Clause 1.6.2 specifies conditions for use of first order elastic analysis. In first order elastic analysis, also referred to as linear analysis (LA), individual members shall be assumed to remain elastic under the action of the design loads for all limit states. Changes in the geometry are not accounted for in the analysis, and changes in the effective stiffnesses of the members due to axial force are neglected. The effects of these changes on the bending moments shall be allowed for by amplifying the first-order bending moments and determining the nominal member compression strength (N_c) using effective lengths as specified in Clause 3.5.1. First order elastic analysis shall consider the effect of flexibility of connections on the displacements and internal actions of the frame.

Member and cross-sectional geometric imperfections are not required to be accounted for in first order elastic analysis. The effect of frame imperfections (out-of-plumbness) shall be accounted for in first order elastic analysis by either one of the following:

(a) Including the frame imperfections directly in the structural model, that is displacing the members and connections from their nominal locations. The initial storey out-of-plumbness ratio ϕ shall be as given by Equation B2.1; or

(b) for regular single or multi-storey framing structures excluding residential construction of one storey, applying notional horizontal forces. Notional forces are lateral loads that are applied at each framing level and specified in terms of the gravity loads (Y_i) applied at that level. Notional loads shall be applied in the direction that adds to the destabilizing effects under the specified load combination. A notional load, $P_i = \phi Y_i$, shall be applied independently in two orthogonal directions as a lateral load in all load combinations. It is not required to be in addition to other lateral loads provided the destabilising effect of these is at least that of the notional load.

Accessed by UNIVERSITY OF SOUTH AUSTRALIA on 03 May 2019 (Document currency not guaranteed when printed)

COPYRIGHT

$$\phi = \phi_o \, \alpha_h \, \alpha_m \qquad \text{. . . B2(1)}$$

where

ϕ_o = basic value

= 1/200

α_h = reduction factor for height h

$$= \frac{2}{\sqrt{h}} \text{ but } \frac{2}{3} \le a_h \le 1.0 \qquad \text{. . . B2(2)}$$

h = total height of structure in metres

α_m = reduction factor for number of columns in a row

$$= \sqrt{\left(0.5\left(1+\frac{1}{m}\right)\right)} \qquad \text{. . . B2(3)}$$

m = number of columns in a row including only those columns which carry a vertical load N^* not less than 50% of the average value of the columns in the vertical plane considered

B3 SECOND ORDER ELASTIC ANALYSIS

Clause 1.6.2 specifies conditions for use of second order elastic analysis. In second-order elastic analysis, also referred to as geometric nonlinear analysis (GNA), the members shall be assumed to remain elastic, and changes in frame geometry under the design load and changes in the elastic effective stiffnesses of the members due to axial forces if they occur in slender sections shall be accounted for. Second order elastic analysis shall consider the effect of flexibility of connections on the displacements and internal actions of the frame.

Cross-sectional and member geometric imperfections are not required to be accounted for in second order elastic analysis as they are already included in the elastic effective stiffnesses of the members due to axial force and in the use of strength curves for member capacity calculations, respectively. The effect of frame imperfections (out-of-plumbness) shall be accounted for in second order elastic analysis by either including frame imperfections directly in the structural model or, for regular single or multi-storey framing structures, applying notional horizontal forces, as specified in Paragraph B2.

The design bending moment shall be taken as the maximum bending moment in the length of the member as determined from the second order elastic analysis.

The design actions determined from second order elastic analysis shall not exceed the design capacity calculated from Sections 2 to 7, as per Clause 1.6.

When determining the design bending moments $\left(M_x^* \text{ and } M_y^*\right)$ from elastic second order analysis, in using Equation 3.5.1(1)—

(a) the terms C_{mx}, C_{my}, α_{nx} and α_{ny} shall be equal to unity, i.e. $C_{mx} = C_{my} = \alpha_{nx} = \alpha_{ny} = 1$; and

(b) the nominal member compression strength (N_c), shall be determined using an effective length equal to the member length, or shorter if justified by an elastic buckling analysis.

Accessed by UNIVERSITY OF SOUTH AUSTRALIA on 03 May 2019 (Document currency not guaranteed when printed)

COPYRIGHT

B4 ADVANCED ANALYSIS

Advanced structural analysis, also referred to as geometric and material nonlinear analysis with imperfections (GMNAI), of a cold-formed steel framing system shall consider all of the following effects:

(a) Flexural, shear and axial member deformations, and connection deformations that contribute to displacements of the structure.

(b) Second-order effects arising from displacements of the structure and its members.

(c) Geometric imperfections, comprising—

  (i) frame imperfections (out-of-plumbness);

  (ii) member imperfections (out-of-straightness); and

  (iii) cross-sectional imperfections (distortions of cross-section).

(d) Stiffness reductions due to axial forces and inelasticity including the effect of residual stresses and partial yielding of the cross-section.

(e) Stiffness reductions due to cross-section deformations or local and distortional deformations.

(f) Uncertainty in system, member, and connection stiffness and strength.

Any rational analysis that considers all of the listed effects is permitted. The structural analysis shall be tested against benchmark analytical solutions, well-documented experimental tests, or similar benchmark results.

The modelling of the non-linear stress-strain relationship shall be based on recognized models for cold-formed steel. Residual stresses shall be modelled directly or indirectly (e.g. through the stress-strain curve), as applicable.

Nonlinear behaviour of connections shall be included in the analysis if it is known to occur.

Geometric imperfections shall be included in the structural model as follows:

(A) Frame imperfections (out-of-plumbness) shall be accounted for in advanced analysis by either including the frame imperfections directly in the structural model or, for regular single or multi-storey framing structures, applying notional horizontal forces, as specified in Paragraph B2, except that a reduced out-of-plumb ratio (ϕ) of 1/500 may be used for advanced analysis.

(B) Member imperfections (out-of-straightness), shall be accounted for in advanced analysis. The maximum value of member imperfection shall be taken as 1/1000 of the member length, where the member length is the distance between connection points to adjoining members or supports.

(C) Cross-section imperfections, including local and distortional buckling imperfections, shall be modelled in advanced analysis, as follows:

  (1) Imperfections in the shapes of the local and distortional buckling modes shall be included in the structural model by multiplying the local and distortional buckling modes assuming unit maximum deformation by imperfection multipliers and superimposing these scaled imperfections onto the perfect geometry.

  (2) The imperfection multipliers (s_{ol}) for local buckling shall be determined as follows:

$$s_{ol} = 0.3t\sqrt{\frac{f_y}{f_{ol}}} \qquad \text{. . . B4(1)}$$

Accessed by UNIVERSITY OF SOUTH AUSTRALIA on 03 May 2019 (Document currency not guaranteed when printed)

COPYRIGHT

where

t = plate thickness

f_{ol} = elastic local buckling stress

(3) The imperfection multipliers ($s$od) for distortional buckling shall be determined as follows:

$$s_{\mathrm{od}} = 0.3t\sqrt{\frac{f_{\mathrm{y}}}{f_{\mathrm{od}}}} \qquad \text{. . . B4(2)}$$

where

t = plate thickness

f_{od} = elastic distortional buckling stress

NOTE: Local buckling is defined in Clause 1.3.27 as a mode of buckling involving plate flexure alone without transverse deformation of the line or lines of intersection of adjoining plates, as shown in Figure B4(a). Distortional buckling is defined in Clause 1.3.15 as a mode of buckling involving change in cross-sectional shape excluding local buckling as shown in Figure B4(b). The local and distortional buckling modes and buckling actions may be determined from a linear buckling analysis based on shell finite element or finite strip discretization of the member.

For the strength and stability limit states, the frame shall be required to support the factored limit states actions multiplied by $1/\phi$, where values of ϕ are given in Table B4 for prequalified frames.

TABLE B4

CAPACITY REDUCTION FACTORS FOR PREQUALIFIED SYSTEMS

Structural system	ϕ
Cold-formed steel portal frames	0.85
Steel storage racks	0.9

NOTE: Local and distortional buckling imperfections are not required to be modelled in advanced analysis of—

(a) unbraced pitched roof cold-formed steel portal frames; and

(b) unbraced cold-formed steel storage racks

when the frame and member imperfections specified in (A) and (B) above are included.

Connections shall have adequate strength and ductility to ensure the structure fails within the members. The design capacity (R_{d}) of connections shall be determined as per Section 5 and shown to equal or exceed the design actions to which the connections are subjected as predicted by the advanced analysis.

Accessed by UNIVERSITY OF SOUTH AUSTRALIA on 03 May 2019 (Document currency not guaranteed when printed)

COPYRIGHT

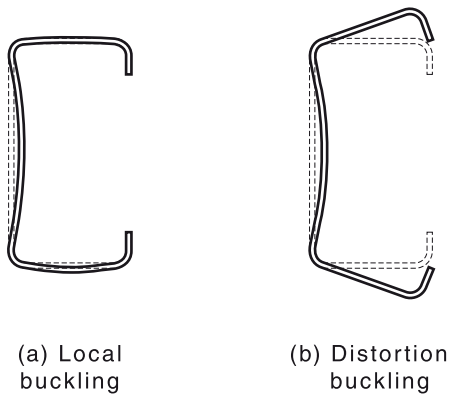

FIGURE B4 BUCKLING IMPERFECTIONS

Accessed by UNIVERSITY OF SOUTH AUSTRALIA on 03 May 2019 (Document currency not guaranteed when printed)

COPYRIGHT

APPENDIX C

PROTECTION

(Informative)

C1 SCOPE

This Appendix applies to the protection of cold-formed structural members, including decking, cladding and structures.

NOTE: See the New Zealand Building Code and the New Zealand Building Code Handbook Verification Method (B2/VM1) and Acceptable Solutions (B2/AS1) for additional requirements, if the New Zealand Building Act is applicable to the project.

C2 PROTECTION AGAINST CORROSION

C2.1 Members to be protected

A member should be adequately protected against corrosive attacks, with due regard to environmental conditions.

C2.2 Protective coating

The protective coating may be applied to steel sheet or strip, either before or after the forming of the members. The type of coating should be specified, after proper account has been taken of the use of the structure, climatic or other local conditions, maintenance provisions, and the effect of the forming process on previously applied coatings.

C2.3 Members made from uncoated steel

A member made from uncoated steel should be protected by a rust-inhibitive coating immediately after processing. The coating should possess a permanent adhesion to the steel. Subsequent coatings, before or after assembly, should adequately adhere to, and be compatible with, the first coating. The type and quality of coatings and their application should comply with the recommendations of the appropriate sections of AS/NZS 2312. Coatings destroyed by welding, assembly, or by handling should be restored as specified in Paragraph C4.

C2.4 Members made from coated steel

For a member made from coated steel, the coatings applied before forming should have adequate mechanical properties and adhesion to the steel sufficient to withstand the forming process without damage or peeling.

NOTE: Recommendations for corrosion protection may be found in AS/NZS 2311 and AS/NZS 2312. For residential construction, recommendations for corrosion protection may be found in NASH Standard—*Residential and Low-rise Steel Framing*, *Part 2: Design Solutions*.

C3 PROTECTION DURING TRANSPORT, HANDLING AND STORAGE

C3.1 General

Structural members that have been distorted, and subsequently corrected, may be weakened to the extent that their structural integrity may be impaired or lost. Such members should not be used.

Accessed by UNIVERSITY OF SOUTH AUSTRALIA on 03 May 2019 (Document currency not guaranteed when printed)

COPYRIGHT

C3.2 Transport and handling

Structural members should be adequately protected during handling and transport to prevent damage. Units that are transported in nested bundles should be separable without damage to the units or their coatings. Care should be taken when handling long units or bundles. Consideration should be given to the use of lifting beams with appropriately spaced lifting points and slings or to lifting with properly spaced forklift tines.

C3.3 Storage

Structural members should be protected from the weather. They should be stacked clear of the ground and protected by a waterproof covering. Ventilation adequate to avoid condensation should be ensured. If bundles become wet, the members should be separated, wiped and placed so that air circulation completes the drying.

C4 REPAIRS TO COATINGS

Coatings that have been damaged by welding or other causes should be restored before the structure is put into service. The damaged area should be dry and clean, free from dirt, grease, loose or heavy scale or rust before the protective coating is applied. When preparing welded assemblies for painting, care should be taken that the area at and near welds is thoroughly cleaned down to base metal. The protective coating should be applied as soon as practicable and before noticeable oxidation of the clean surface occurs. Damaged zinc coating should be restored with a suitable zinc paint.

Accessed by UNIVERSITY OF SOUTH AUSTRALIA on 03 May 2019 (Document currency not guaranteed when printed)

COPYRIGHT

APPENDIX D

BUCKLING STRESSES AND MOMENTS AND SHEARS FOR SECTIONS IN COMPRESSION, BENDING AND SHEAR

(Normative)

D1 MEMBERS IN COMPRESSION

D1.1 Global buckling stresses

D1.1.1 *Compression members without holes*

D1.1.1.1 *Sections not subject to torsional or flexural-torsional buckling*

For doubly-symmetric sections, closed cross-sections and any other sections that can be shown not to be subject to torsional or flexural-torsional buckling, the elastic flexural buckling stress (f_{oc}) shall be determined as follows:

$$f_{oc} = \frac{\pi^2 E}{\left(\frac{l_e}{r}\right)^2} \qquad \text{. . . D1.1.1(1)}$$

where

l_e = effective length of member

r = radius of gyration of the full, unreduced cross-section

D1.1.1.2 *Doubly- or singly-symmetric sections (see Figures 1.3E(a) and (c)) subject to torsional or flexural-torsional buckling*

For sections subject to torsional or flexural-torsional buckling, f_{oc} shall be taken as the smaller of f_{oy} calculated using Equation D1.1.1(4) and f_{oxz} calculated as follows:

$$f_{oxz} = \frac{1}{2\beta}\left[\left(f_{ox} + f_{oz}\right) - \sqrt{\left(f_{ox} + f_{oz}\right)^2 - 4\beta f_{ox} f_{oz}}\right] \qquad \text{. . . D1.1.1(2)}$$

where f_{ox}, f_{oy} and f_{oz} are given by—

f_{ox} = elastic buckling stress in an axially loaded compression member for flexural buckling about the x-axis

$$= \frac{\pi^2 E}{\left(\frac{l_{ex}}{r_x}\right)^2} \qquad \text{. . . D1.1.1(3)}$$

f_{oy} = elastic buckling stress in an axially loaded compression member for flexural buckling about the y-axis

$$= \frac{\pi^2 E}{\left(\frac{l_{ey}}{r_y}\right)^2} \qquad \text{. . . D1.1.1(4)}$$

Accessed by UNIVERSITY OF SOUTH AUSTRALIA on 03 May 2019 (Document currency not guaranteed when printed)

COPYRIGHT

f_{oz} = elastic buckling stress in an axially loaded compression member for torsional buckling

$$= \frac{GJ}{A_g r_{01}^2}\left(1+\frac{\pi^2 EI_W}{GJl_{ez}^2}\right) \quad \text{. . . D1.1.1(5)}$$

l_{ex}, l_{ey}, l_{ez} = effective lengths for buckling about the x- and y-axes, and for twisting, respectively

G = shear modulus of elasticity (80×10^3 MPa)

J = torsion constant for a cross-section

I_w = warping constant for a cross-section

A_g = area of the full cross-section

r_{o1} = polar radius of gyration of the cross-section about the shear centre

$$= \sqrt{r_x^2 + r_y^2 + x_o^2 + y_o^2} \quad \text{. . . D1.1.1(6)}$$

r_x, r_y = radii of gyration of the cross-section about the *x*- and *y*-axes, respectively

x_o, y_o = coordinates of the shear centre of the cross-section

$$\beta = 1-\left(\frac{x_o}{r_{o1}}\right)^2 \quad \text{. . . D1.1.1(7)}$$

Alternatively, a conservative estimate of f_{oxz} may be obtained from the following equation:

$$f_{oxz} = \frac{f_{oz} f_{ox}}{\left(f_{oz} + f_{ox}\right)} \quad \text{. . . D1.1.1(8)}$$

For singly-symmetric sections, the *x*-axis shall be assumed to be the axis of symmetry.

For doubly-symmetric sections subject to torsional buckling, f_{oc} shall be taken as the smaller of f_{oc} calculated in accordance with Equation D1.1.1(1) and $f_{oc} = f_{oz}$.

D1.1.1.3 *Point-symmetric sections (see Figure 1.3(E)(b))*

For point-symmetric sections subject to flexural or torsional buckling, f_{oc} shall be taken as the smaller of f_{oc} calculated in accordance with Equation D1.1.1(1) and $f_{oc} = f_{oz}$.

D1.1.1.4 *Non-symmetric sections (see Figure 1.3(E)(d))*

For shapes whose cross-sections do not have any symmetry, either about an axis or about a point, f_{oc} shall be taken as the smallest value which shall satisfy the following cubic equation:

$$f_{oc}^3\left(r_{o1}^2 - x_o^2 - y_o^2\right) - f_{oc}^2\left[r_{o1}^2\left(f_{ox} + f_{oy} + f_{oz}\right) - \left(f_{oy}x_o^2 + f_{ox}y_o^2\right)\right] + f_{oc}\, r_{o1}^2\left(f_{ox}f_{oy} + f_{oy}f_{oz} + f_{ox}f_{oz}\right) - \left(f_{ox}f_{oy}f_{oz}\, r_{o1}^2\right) = 0 \quad \text{. . . D1.1.1(9)}$$

D1.1.2 *Compression members with holes*

D1.1.2.1 *Sections not subject to torsional or flexural-torsional buckling*

For doubly-symmetric sections, closed cross-sections and any other sections that can be shown not to be subject to torsional or flexural-torsional buckling, the elastic flexural buckling stress (f_{oc}) shall be determined as follows:

Accessed by UNIVERSITY OF SOUTH AUSTRALIA on 03 May 2019 (Document currency not guaranteed when printed)

COPYRIGHT

$$f_{oc} = \frac{\pi^2 E I_{avg}}{A_g l_e^2} \qquad \text{. . . D1.1.2(1)}$$

where

l_e = effective length of member

A_g = gross area of the cross-section

I_{avg} = weighted average second moment of area about axis of buckling

TABLE D1.1.2.1

WEIGHTED AVERAGE CROSS-SECTIONAL PROPERTIES FOR SYMMETRIC HOLE DISTRIBUTION ABOUT MID-HEIGHT

Average property	Formula
Cross-sectional area	$A_{avg} = \dfrac{A_g L_g + A_{net} L_{net}}{L}$
Moment of area about axis of buckling	$I_{avg} = \dfrac{I_g L_g + I_{net} L_{net}}{L}$
Saint Venant's torsion constant	$J_{avg} = \dfrac{J_g L_g + J_{net} L_{net}}{L}$
Polar radius gyration about shear centre	$r_{ol,avg} = \sqrt{x_{o,avg}^2 + y_{o,avg}^2 + \dfrac{I_{x,avg} + I_{y,avg}}{A_{avg}}}$
Distance from centroid to shear centre in principal x-axis direction	$x_{o,avg} = \dfrac{x_{o,g} L_g + x_{o,net} L_{net}}{L}$
Distance from centroid to shear centre in principal y-axis direction	$y_{o,avg} = \dfrac{y_{o,g} L_g + y_{o,net} L_{net}}{L}$

A_g, A_{net} = gross and net area respectively

L_g = total segment length

L_{net} = total length of holes or net section regions

L = total segment length

= $L_g + L_{net}$

I_g, I_{net} = second moment of area of gross or net cross-section about axis of buckling respectively

J_g, J_{net} = Saint-Venant torsion constant of gross or net-section respectively

$x_{o,g}$, $x_{o,net}$ = distance from gross or net cross-section centroid to shear centre in principal x-axis direction

$y_{o,g}$, $y_{o,net}$ = distance from gross or net cross-section centroid to shear centre in principal y-axis direction

$r_{ol,g}$, $r_{ol,net}$ = polar radius of gyration about shear centre axis of gross or net cross-section respectively

Accessed by UNIVERSITY OF SOUTH AUSTRALIA on 03 May 2019 (Document currency not guaranteed when printed)

COPYRIGHT

D1.1.2.2 *Doubly- or singly-symmetric sections [see Figures 1.3(E)(a) and (c)] subject to torsional or flexural-torsional buckling*

For sections subject to torsional or flexural-torsional buckling, f_{oc} shall be taken as the smaller of f_{oy} calculated using Equation D1.1.2(4) and f_{oxz} calculated as follows:

$$f_{oxz} = \frac{1}{2\beta}\left[\left(f_{ox} + f_{oz}\right) - \sqrt{\left(f_{ox} + f_{oz}\right)^2 - 4\beta f_{ox} f_{oz}}\right] \quad \text{. . . D1.1.2(2)}$$

where f_{ox}, f_{oy} and f_{oz} are given by—

f_{ox} = elastic buckling stress in an axially loaded compression member for flexural buckling about the x-axis

$$= \frac{\pi^2 E I_{x,avg}}{A_g l_{ex}^2} \quad \text{. . . D1.1.2(3)}$$

f_{oy} = elastic buckling stress in an axially loaded compression member for flexural buckling about the y-axis

$$= \frac{\pi^2 E I_{y,avg}}{A_g l_{ey}^2} \quad \text{. . . D1.1.2(4)}$$

f_{oz} = elastic buckling stress in an axially loaded compression member for torsional buckling

$$= \frac{G J_{avg}}{A_g r_{01,avg}^2}\left(1 + \frac{\pi^2 E I_{w,net}}{G J_{avg} l_{ez}^2}\right) \quad \text{. . . D1.1.2(5)}$$

l_{ex}, l_{ey}, l_{ez} = effective lengths for buckling about the x- and y-axes, and for twisting, respectively

G = shear modulus of elasticity (80×10^3 MPa)

J_{avg} = weighted average torsion constant for a cross-section

$I_{w,net}$ = net warping constant for a cross-section assuming the cross-section thickness is zero at a hole

A_g = gross area of the cross-section

$r_{o1,avg}$ = weighted average polar radius of gyration of the cross-section about the shear centre

$$= \sqrt{r_{x,avg}^2 + r_{y,avg}^2 + x_{o,avg}^2 + y_{o,avg}^2} \quad \text{. . . D1.1.2(6)}$$

$r_{x,avg}$, $r_{y,avg}$ =weighted average radii of gyration of the cross-section about the x- and y-axes, respectively

$x_{o,avg}$, $y_{o,avg}$ =weighted average coordinates of the shear centre of the cross-section

$$\beta = 1 - \left(\frac{x_{o,avg}}{r_{o1,avg}}\right)^2 \quad \text{. . . D1.1.2(7)}$$

Alternatively, a conservative estimate of f_{oxz} may be obtained from the following equation:

$$f_{oxz} = \frac{f_{oz} f_{ox}}{\left(f_{oz} + f_{ox}\right)} \quad \text{. . . D1.1.2(8)}$$

For singly-symmetric sections, the x-axis shall be assumed to be the axis of symmetry.

Accessed by UNIVERSITY OF SOUTH AUSTRALIA on 03 May 2019 (Document currency not guaranteed when printed)

COPYRIGHT

For doubly-symmetric sections subject to torsional buckling, f_{oc} shall be taken as the smaller of f_{oc} calculated in accordance with Equation D1.1.2(1) and $f_{oc} = f_{oz}$.

D1.1.2.3 *Point-symmetric sections [see Figure 1.3(E)(b)]*

For point-symmetric sections subject to flexural or torsional buckling, f_{oc} shall be taken as the smaller of f_{oc} calculated in accordance with Paragraph D1.1.2.1 and $f_{oc} = f_{oz}$.

D1.1.2.4 *Non-symmetric sections [see Figure 1.3(E)(d)]*

For shapes whose cross-sections do not have any symmetry, either about an axis or about a point, f_{oc} shall be taken as the smallest value which shall satisfy the following cubic equation:

$$f_{oc}^3\left(r_{o1,avg}^2 - x_{o,avg}^2 - y_{o,avg}^2\right) - f_{oc}^2\left[r_{o1,avg}^2\left(f_{ox} + f_{oy} + f_{oz}\right) - \left(f_{oy}x_o^2 + f_{ox}y_o^2\right)\right] + f_{oc}\, r_{o1,avg}^2\left(f_{ox}f_{oy} + f_{oy}f_{oz} + f_{ox}f_{oz}\right) - \left(f_{ox}f_{oy}f_{oz}\, r_{o1,avg}^2\right) = 0 \quad \text{. . . D1.1.2(9)}$$

D1.2 Distortional buckling stresses

D1.2.1 *Compression members without holes*

D1.2.1.1 *General channels in compression*

The elastic distortional buckling stress (f_{od}) of general channels in compression (see Figure D2(a)) shall be determined as follows:

$$f_{od} = \frac{E}{2A}\left\{\left(\alpha_1 + \alpha_2\right) - \sqrt{\left[\left(\alpha_1 + \alpha_2\right)^2 - 4\alpha_3\right]}\right\} \quad \text{. . . D1.2.1(1)}$$

where

$$\alpha_1 = \frac{\eta}{\beta_1}\left(\beta_2 + 0.039J\lambda^2\right) + \frac{k_\phi}{\beta_1\eta E} \quad \text{. . . D1.2.1(2)}$$

$$\alpha_2 = \eta\left(I_y + 2y_o\frac{\beta_3}{\beta_1}\right) \quad \text{. . . D1.2.1(3)}$$

$$\alpha_3 = \eta\left(\alpha_1 I_y - \frac{\eta}{\beta_1}\beta_3^2\right) \quad \text{. . . D1.2.1(4)}$$

$$\beta_1 = h_x^2 + \left(\frac{I_x + I_y}{A}\right) \quad \text{. . . D1.2.1(5)}$$

$$\beta_2 = I_w + I_x\left(x_o - h_x\right)^2 \quad \text{. . . D1.2.1(6)}$$

$$\beta_3 = I_{xy}\left(x_o - h_x\right) \quad \text{. . . D1.2.1(7)}$$

$$\beta_4 = \beta_2 + \left(y_o - h_y\right)\left[I_y\left(y_o - h_y\right) - 2\beta_3\right] \quad \text{. . . D1.2.1(8)}$$

$$\lambda = 4.80\left(\frac{\beta_4 b_w}{t^3}\right)^{0.25} \quad \text{. . . D1.2.1(9)}$$

$$\eta = \left(\frac{\pi}{\lambda}\right)^2 \quad \text{. . . D1.2.1(10)}$$

$$k_\phi = \frac{Et^3}{5.46\left(b_w + 0.06\lambda\right)}\left[1 - \frac{1.11f'_{od}}{Et^2}\left(\frac{b_w^2\lambda}{b_w^2 + \lambda^2}\right)^2\right] \quad \text{. . . D1.2.1(11)}$$

Accessed by UNIVERSITY OF SOUTH AUSTRALIA on 03 May 2019 (Document currency not guaranteed when printed)

COPYRIGHT

f'_{od} shall be obtained from Equation D1.2.1(1) with—

$$\alpha_1 = \frac{\eta}{\beta_1}\left(\beta_2 + 0.039 J \lambda^2\right) \quad \text{. . . D1.2.1(12)}$$

The values of A, J, I_x, I_y, I_{xy}, I_w are for the compression flange and lip alone.

D1.2.1.2 *Simple lipped channels in compression*

The elastic distortional buckling stress (f_{od}) of simple lipped channels in compression [see Figure D2(b)] shall be determined as follows:

$$f_{\text{od}} = \frac{E}{2A}\left[\left(\alpha_1 + \alpha_2\right) - \sqrt{\left(\alpha_1 + \alpha_2\right)^2 - 4\alpha_3}\right] \quad \text{. . . D1.2.1(13)}$$

where

$$\alpha_1 = \frac{\eta}{\beta_1}\left(I_x b_f^2 + 0.039 J \lambda^2\right) + \frac{k_\phi}{\beta_1 \eta E} \quad \text{. . . D1.2.1(14)}$$

$$\alpha_2 = \eta\left(I_y + \frac{2}{\beta_1}\bar{y} b_f I_{xy}\right) \quad \text{. . . D1.2.1(15)}$$

$$\alpha_3 = \eta\left(\alpha_1 I_y - \frac{\eta}{\beta_1} I_{xy}^2 b_f^2\right) \quad \text{. . . D1.2.1(16)}$$

$$\beta_1 = \bar{x}^2 + \left(\frac{I_x + I_y}{A}\right) \quad \text{. . . D1.2.1(17)}$$

$$\lambda = 4.80\left(\frac{I_x b_f^2 b_w}{t^3}\right)^{0.25} \quad \text{. . . D1.2.1(18)}$$

$$\eta = \left(\frac{\pi}{\lambda}\right)^2 \quad \text{. . . D1.2.1(19)}$$

$$k_\phi = \frac{Et^3}{5.46\left(b_w + 0.06\lambda\right)}\left[1 - \frac{1.11 f'_{\text{od}}}{Et^2}\left(\frac{b_w^2 \lambda}{b_w^2 + \lambda^2}\right)^2\right] \quad \text{. . . D1.2.1(20)}$$

f'_{od} is obtained from Equation D1.2.1(1) with—

$$\alpha_1 = \frac{\eta}{\beta_1}\left(I_x b_f^2 + 0.039 J \lambda^2\right) \quad \text{. . . D1.2.1(21)}$$

The values of $A, \bar{x}, \bar{y}, J, I_x, I_y$ and I_{xy} for a compression flange with a simple lip are as follows:

$$A = \left(b_f + d_l\right)t \quad \text{. . . D1.2.1(22)}$$

$$\bar{x} = \frac{\left(b_f^2 + 2 b_f d_l\right)}{2\left(b_f + d_l\right)} \quad \text{. . . D1.2.1(23)}$$

$$\bar{y} = \frac{d_l^2}{2\left(b_f + d_l\right)} \quad \text{. . . D1.2.1(24)}$$

Accessed by UNIVERSITY OF SOUTH AUSTRALIA on 03 May 2019 (Document currency not guaranteed when printed)

COPYRIGHT

$$J = \frac{t^3\left(b_f + d_l\right)}{3} \qquad \text{. . . D1.2.1(25)}$$

$$I_x = \frac{b_f t^3}{12} + \frac{t d_l^3}{12} + b_f t \bar{y}^2 + d_l t\left(\frac{d_l}{2} - \bar{y}\right)^2 \qquad \text{. . . D1.2.1(26)}$$

$$I_y = \frac{t b_f^3}{12} + \frac{d_l t^3}{12} + d_l t\left(b_f - \bar{x}\right)^2 + b_f t\left(\bar{x} - \frac{b_f}{2}\right)^2 \qquad \text{. . . D1.2.1(27)}$$

$$I_{xy} = b_f t\left(\frac{b_f}{2} - \bar{x}\right)\left(-\bar{y}\right) + d_l t\left(\frac{d_l}{2} - \bar{y}\right)\left(b_f - \bar{x}\right) \qquad \text{. . . D1.2.1(28)}$$

D1.2.2 *Compression members with holes*

For members having hole(s) in the web, the distortional buckling stress shall be determined in accordance with Paragraphs D1.2.1.1 or D1.2.1.2 as appropriate, provided the thickness in Equations D1.2.1(9) and D1.2.1(11), or D1.2.1(18) and D1.2.1(20) as appropriate be replaced by a modified thickness (t_r) as follows:

$$t_r = \left(1 - \frac{L_h}{L_{crd}}\right)^{1/3} t \qquad \text{. . . D1.2.2(1)}$$

where

t = thickness of web

L_h = hole length

L_{crd} = distortional buckling half-wavelength of member with gross cross section determined numerically or using Equation D1.2.1(9) or D1.2.1(18) as appropriate

For members having patterned hole(s) along the web, the distortional buckling stress shall be determined in accordance with Paragraph D1.2.1.1 or D1.2.1.2 as appropriate provided the thickness in Equations D1.2.1(9) and D1.2.1(11), or D1.2.1(18) and D1.2.1(20) as appropriate, be replaced by modified thickness (t_r) as follows:

$$t_r = \left(\frac{A_{web,net}}{A_{web,gross}}\right)^{1/3} t \qquad \text{. . . D1.2.2(2)}$$

where

t = thickness of web

$A_{web,net}$ = minimum net area of the web

$A_{web,gross}$ = gross area of the web

Accessed by UNIVERSITY OF SOUTH AUSTRALIA on 03 May 2019 (Document currency not guaranteed when printed)

COPYRIGHT

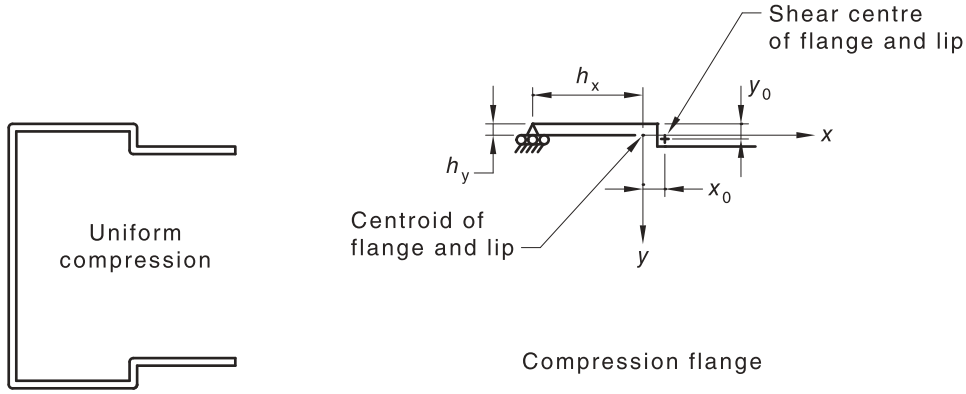

(a) General channel in compression

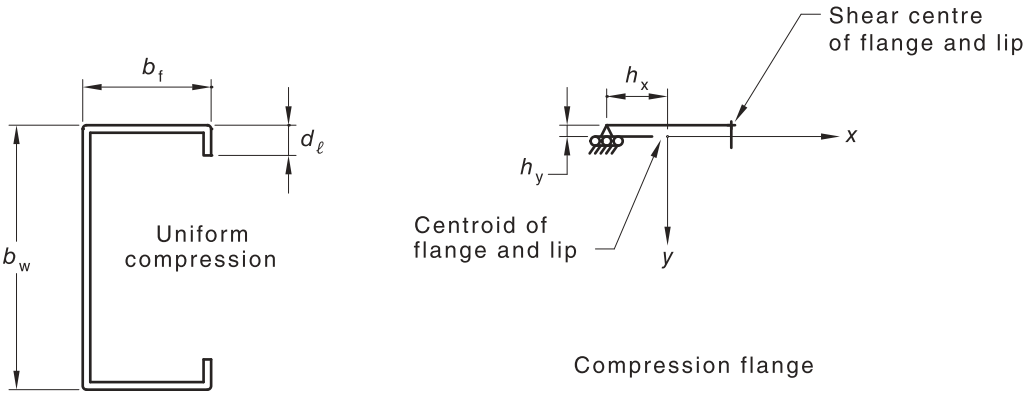

(b) Simple lipped channel in compression

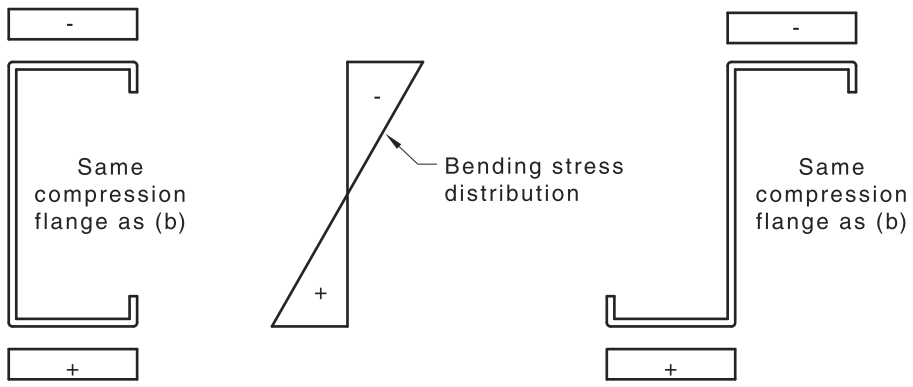

(c) Simple lipped channel or Z-section in bending

FIGURE D2 GENERAL, LIPPED CHANNEL AND Z-SECTION MODELS FOR DISTORTIONAL BUCKLING

Accessed by UNIVERSITY OF SOUTH AUSTRALIA on 03 May 2019 (Document currency not guaranteed when printed)

COPYRIGHT

D1.3 LOCAL BUCKLING STRESSES

D1.3.1 *Compression members without holes*

The plate elastic buckling stress (f_{ol}) of compression members without holes shall be determined as follows:

$$f_{ol} = \left[\frac{k\pi^2 E}{12\left(1-v^2\right)}\right]\left(\frac{t}{b}\right)^2 \quad \text{. . . D1.3.1}$$

k = plate buckling coefficient

= 4 for stiffened elements supported by a web on each longitudinal edge (k values for different types of elements are given in the applicable clauses)

E = Young's modulus of elasticity (200×10^3 MPa)

v = Poisson's ratio

= 0.3

t = thickness of the uniformly compressed stiffened elements

Alternatively, the plate buckling coefficient (k) for each flat element may be determined from a rational elastic buckling analysis of the whole section as a plate assemblage subjected to the longitudinal stress distribution in the section prior to buckling.

D1.3.2 *Compression members with holes*

Local buckling stress of members with holes shall be calculated using Equation D1.3.1. When determining f_{ol} for all elements, elements with holes shall be calculated as both unstiffened elements at the hole location and as a separate element where the hole is not located. For the unstiffened element at the hole location, the buckling stress shall be modified to account for the net section by multiplying the buckling stress by the ratio A_{net}/A_g.

D2 MEMBERS IN BENDING

D2.1 Global buckling moments

D2.1.1 *Members in bending without holes*

D2.1.1.1 *General*

The elastic lateral-torsional buckling moment (M_o) shall be determined according to Paragraph D2.1.1.2 or D2.1.1.3 as appropriate.

D2.1.1.2 *Singly-, doubly- and point-symmetric sections, see Figures 1.3(E)(a), (b) and (c)*

For singly-symmetric sections, x-axis is the axis of symmetry oriented such that the shear centre has a negative x-coordinate and y_o is zero.

(a) For singly-symmetric sections bent about the symmetry axis, for doubly-symmetric sections bent about the x-axis and for Z-sections bent about an axis perpendicular to the web, M_o shall be calculated as follows:

$$M_o = C_b A_g r_{ol}\sqrt{f_{oy} f_{oz}} \quad \text{. . . D2.1.1(1)}$$

where the elastic buckling stresses f_{oy}, and f_{oz} are defined in Paragraph D1.1, and

Accessed by UNIVERSITY OF SOUTH AUSTRALIA on 03 May 2019 (Document currency not guaranteed when printed)

COPYRIGHT

C_b = coefficient depending on moment distribution in the laterally unbraced segment

$$= \frac{12.5M_{max.}}{2.5M_{max.} + 3M_3 + 4M_4 + 3M_5} \quad \text{. . . D2.1.1(2)}$$

$M_{max.}$ = absolute value of the maximum moment in the unbraced segment

M_3 = absolute value of the moment at quarter point of the unbraced segment

M_4 = absolute value of the moment at mid-point of the unbraced segment

M_5 = absolute value of the moment at three-quarter point of the unbraced segment

C_b may be taken as unity for all cases. For cantilevers or overhangs where the free end is unbraced, C_b shall be taken as unity.

Alternatively, C_b may be computed from Table D2.1.

A_g = area of the full cross-section

r_{o1} = polar radius of gyration of the cross-section about the shear centre

$$= \sqrt{r_x^2 + r_y^2 + x_o^2 + y_o^2} \quad \text{. . . D2.1.1(3)}$$

r_x, r_y = radii of gyration of the cross-section about the x- and y-axes, respectively

x_o, y_o = coordinates of the shear centre of the cross-section

The value of I_y to be used in the calculation of f_{oy} for Z-sections shall be the value calculated about the inclined minor principal axis. Alternatively, for Z-sections restrained by sheeting against lateral movement effectively bracing the tension flange in accordance with Clause 4.3.2.1, the values of I_y and I_w shall be those for an equivalent channel where the direction of the flange of the Z-section attached to the sheeting is reversed.

For a channel- or Z-section that is intermediately braced in accordance with Clause 4.3.2.3, the bracing interval (a) shall be used instead of the lengths (l_{ey}, l_{ez}) in the calculation of M_o.

Values of the bracing interval (a) and coefficient (C_b) for uniformly distributed loads, applied within the span of intermediately braced simply supported beams, are given in Table D2.1.

Alternatively, M_o may be calculated using Equation D2.1.1(7) for point-symmetric Z-sections.

(b) For singly-symmetric sections bent about the centroidal axis perpendicular to the symmetry axis, M_o shall be calculated as follows:

Accessed by UNIVERSITY OF SOUTH AUSTRALIA on 03 May 2019 (Document currency not guaranteed when printed)

COPYRIGHT

$$M_o = \frac{C_s A f_{ox}\left[\left(\frac{\beta_y}{2}\right) + C_s\sqrt{\left(\frac{\beta_y}{2}\right)^2 + \frac{r_{o1}^2 f_{oz}}{f_{ox}}}\right]}{C_{TF}} \quad \text{. . . D2.1.1(4)}$$

where the elastic buckling stresses f_{ox} and f_{oz} are defined in Paragraph D1.1, and

C_{TF} = coefficient for unequal end moment

$$= 0.6 - 0.4\left(\frac{M_1}{M_2}\right) \quad \text{. . . D2.1.1(5)}$$

M_1 is the smaller and M_2 the larger bending moment at the ends of the unbraced length. The ratio of end moments (M_1/M_2) is positive if M_1 and M_2 have the same sign (reverse curvature bending) and negative if they are of opposite sign (single curvature bending). If the bending moment at any point within an unbraced length is larger than that at both ends of this length, C_{TF} shall be taken as unity

C_s = coefficient

= +1, for moment causing compression on the shear centre side of the centroid (see Figure E1 of Appendix E)

= –1, for moment causing tension on the shear centre side of the centroid (see Figure E1 of Appendix E)

β_y = monosymmetry section constant about the y-axis (see Paragraph E2 of Appendix E)

$$= \frac{I}{I_y}\left(\int_A xy^2 dA + \int_A x^3 dA\right) - 2x_o \quad \text{. . . D2.1.1(6)}$$

I_y = second moment of area of the cross-section about the y-axis

x, y = principal axes of the cross-section

D2.1.1.3 *Point-symmetric Z-sections*

For point-symmetric Z-sections, M_o shall be calculated as follows:

$$M_o = \frac{\pi^2 E C_b d I_{yc}}{2l^2} \quad \text{. . . D2.1.1(7)}$$

where

I_{yc} = second moment of area of the compression portion of the section about the centroidal axis of the full section parallel to the web, using the full unreduced section

l = unbraced length of the member

Accessed by UNIVERSITY OF SOUTH AUSTRALIA on 03 May 2019 (Document currency not guaranteed when printed)

COPYRIGHT

TABLE D2.1

COEFFICIENTS (C_b) FOR SIMPLY SUPPORTED SINGLE SPAN BEAMS WITH UNIFORMLY DISTRIBUTED LOADS WITHIN THE SPAN

Load position	Coefficient (C_b)		
	No bracing ($a = l$) (see Note 1)	One central brace ($a = 0.5l$)	Third point bracing ($a = 0.33l$) (see Note 2)
Tension flange	1.92	1.59	1.47
Shear centre	1.22	1.37	1.37
Compression flange	0.77	1.19	1.28

NOTES:

1 Channel and Z-beams without intermediate bracing may show noticeable twisting even when torsionally restrained by sheeting.

2 C_b applies to the central section.

D2.1.2 *Members in bending with holes*

The elastic lateral-torsional buckling moment (M_o) shall be determined as follows:

(a) For singly-, doubly- and point-symmetric sections [see Figures 1.3(E)(a), (b) and (c)].

(b) For singly-symmetric sections, x-axis is the axis of symmetry oriented such that the shear centre has a negative x-coordinate and y_o is zero.

(c) For singly-symmetric sections bent about the symmetry axis, for doubly-symmetric sections bent about the x-axis and for Z-sections bent about an axis perpendicular to the web, M_o shall be calculated as follows:

$$M_o = C_b A_g r_{ol,avg} \sqrt{f_{oy} f_{oz}} \qquad \text{. . . D2.1.2(1)}$$

where the elastic buckling stresses f_{oy}, and f_{oz} are defined in Paragraph D1.1.2.2, and

A_g = gross area of the cross-section

$r_{ol,avg}$ = weighted average polar radius of gyration of the cross-section about the shear centre

$$= \sqrt{r_{x,avg}^2 + r_{y,avg}^2 + x_{o,avg}^2 + y_{o,avg}^2} \qquad \text{. . . D2.1.2(2)}$$

$= r_{x,avg}, r_{y,avg}$ = weighted average radii of gyration of the cross-section about the x- and y-axes, respectively

$x_{o,avg}, y_{o,avg}$ = weighted average coordinates of the shear centre of the cross-section

C_b is as defined in Paragraph D2.1.1.

All the other requirements, as specified in Paragraph D2.1.1.2(a), shall apply.

D2.2 Distortional buckling stresses

D2.2.1 *Members in bending without holes*

The elastic distortional buckling stress (f_{od}) of simple lipped channels or Z-sections in bending about the axis perpendicular to the web [see Figure D2(c)] shall be determined in accordance with Paragraph D1.2.1, except that—

$$\lambda = 4.80\left(\frac{I_x b_f^2 b_w}{2t^3}\right)^{0.25} \qquad \text{. . . D2.2.1(1)}$$

Accessed by UNIVERSITY OF SOUTH AUSTRALIA on 03 May 2019 (Document currency not guaranteed when printed)

COPYRIGHT

$$k_\phi = \frac{2Et^3}{5.46\left(b_w + 0.06\lambda\right)}\left[1 - \frac{1.11 f'_{od}}{Et^2}\left(\frac{b_w^4 \lambda^2}{12.56\lambda^4 + 2.192 b_w^4 + 13.39\lambda^2 b_w^2}\right)\right] \quad \text{. . . D2.2.1(2)}$$

f'_{od} shall be obtained from Equation D1.2.1(13) with—

$$\alpha_1 = \frac{\eta}{\beta_1}\left(I_x b_f^2 + 0.039 J \lambda^2\right) \quad \text{. . . D2.2.1(3)}$$

If k_ϕ is negative, k_ϕ shall be calculated with $f'_{od} = 0$.

If the bracing interval that fully restrains rotation of the flange and lip in the distortional mode is located at an interval less than λ obtained from Equation D2.2.1(1), the bracing interval shall be used in place of λ.

D2.2.2 *Members in bending with holes*

For members having hole(s) in the web, the distortional buckling stress shall be determined in accordance with Paragraph D2.2.1 provided the thickness in Equations D2.2.1(1) and D2.2.1(2) are replaced by modified thickness t_r as follows:

t_r = modified thickness

$$= \left(1 - \frac{L_h}{L_{crd}}\right)^{1/3} t \quad \text{. . . D2.2.2(1)}$$

where

t = thickness of web

L_h = hole length

L_{crd} = distortional buckling half-wavelength of member with gross cross section determined numerically or using Equation D2.2.1(1)

For members having patterned hole(s) along the web, the distortional buckling stress shall be determined in accordance with Paragraph D2.2.1 provided the thickness in Equations D2.2.1(1) and D2.2.1(2) is replaced by modified thickness t_r as follows:

t_r = modified thickness

$$= \left(\frac{A_{web,net}}{A_{web,gross}}\right)^{1/3} t \quad \text{. . . D2.2.2(2)}$$

where

t = thickness of web

$A_{web,net}$ = minimum net area of the web

$A_{web,gross}$ = gross area of the web

D2.3 Local buckling stresses

D2.3.1 *Members in bending without holes*

Local buckling stresses shall be calculated using Equation D1.3.1, except that the local buckling coefficients k appropriate to bending shall be used.

D2.3.2 *Members in bending with holes*

Local buckling stress of members with holes shall be calculated using Paragraph D2.3.1. When determining f_{ol} for all elements, elements with holes shall be calculated as both unstiffened elements at the hole location and as a separate element where the hole is not

Accessed by UNIVERSITY OF SOUTH AUSTRALIA on 03 May 2019 (Document currency not guaranteed when printed)

COPYRIGHT

located. For the unstiffened element at the hole location, the buckling stress shall be modified to account for the net section by multiplying the buckling stress by the ratio Z_{net}/Z_g.

D3 MEMBERS IN SHEAR

The elastic shear buckling force of the web (V_{cr}) of members in shear shall be determined as follows:

$$V_{cr} = \frac{\pi^2 E A_w k_v}{12\left(1-v^2\right)\left(\frac{d_1}{t}\right)^2} \quad \text{. . . D3(1)}$$

where

k_v = shear buckling coefficient calculated in accordance with (a), (b), or (c) as follows:

= (a) For un-reinforced webs, $k_v = 5.34$

= (b) For webs with transverse stiffeners satisfying the requirements of Clause 3.3.8.1

For $a/d_1 < 1.0$

$$k_v = 4.00 + \frac{5.34}{\left(a/d_1\right)^2} \quad \text{. . . D3(2)}$$

For $a/d_1 \geq 1.0$

$$k_v = 5.34 + \frac{4.00}{\left(a/d_1\right)^2} \quad \text{. . . D3(3)}$$

where $A_w = d_1 t$

a= shear panel length of an un-reinforced web element

= clear distance between transverse stiffeners of reinforced web elements

(c) For webs restrained at the top and bottom edges by flanges

$$k_v = k_{ss} + k_n\left(k_{sf} - k_{ss}\right) \quad \text{. . . D3(4)}$$

$$k_{ss} = 4 + \frac{5.34}{\left(a/d_1\right)^2} \text{ for } \frac{a}{d_1} < 1 \quad \text{. . . D3(5)}$$

$$k_{ss} = 5.34 + \frac{4}{\left(a/d_1\right)} \text{ for } \frac{a}{d_1} \geq 1 \quad \text{. . . D3(6)}$$

k_n =coefficient, see Table D3

$$k_{sf} = \frac{5.34}{\left(a/d_1\right)^2} + \frac{2.31}{\left(a/d_1\right)} - 3.44 + 8.39\left(a/d_1\right) \text{ for } \frac{a}{d_1} < 1 \quad \text{. . . D3(7)}$$

$$k_{sf} = 8.98 + \frac{5.61}{\left(a/d_1\right)^2} - \frac{1.99}{\left(a/d_1\right)^3} \text{ for } \frac{a}{d_1} \geq 1 \quad \text{. . . D3(8)}$$

Accessed by UNIVERSITY OF SOUTH AUSTRALIA on 03 May 2019 (Document currency not guaranteed when printed)

COPYRIGHT

where

E = modulus of elasticity of steel

v = Poisson's ratio of steel

d_1 = depth of the flat portion of web measured along the plane of the web (see Figure D3)

t = web thickness

k_{ss}, k_{sf} = shear buckling coefficients of plates with simple-simple and simple-fixed boundary

a = shear span of web panel

TABLE D3

COEFFICIENT k_n FOR OPEN AND HOLLOW FLANGE STEEL BEAMS

Section	k_n	
Lipped channel (LC)	0.23	$\frac{b_f}{d_1} \geq 0.3$
Hollow flange channel (HFC)	0.87	$\frac{b_f}{d_1} \geq 0.3$
Triangular hollow flange beam (THFB)	0.90	$\frac{b_f}{d_1} \geq 0.3$
Rectangular hollow flange beam (RHFB)	$\left(0.82\frac{t_f}{t_w} - 0.41\right) 0.5 \leq \frac{t_f}{t_w} < 1.6$	$\frac{b_f}{d_1} \geq 0.4$
	$0.90 \quad \frac{t_f}{t_w} \geq 1.6$	$\frac{b_f}{d_1} \geq 0.4$

LEGEND:
b_f = flange width
d_1 = flat portion of clear height of web
t_w = web thickness
t_f = flange thickness

Accessed by UNIVERSITY OF SOUTH AUSTRALIA on 03 May 2019 (Document currency not guaranteed when printed)

COPYRIGHT

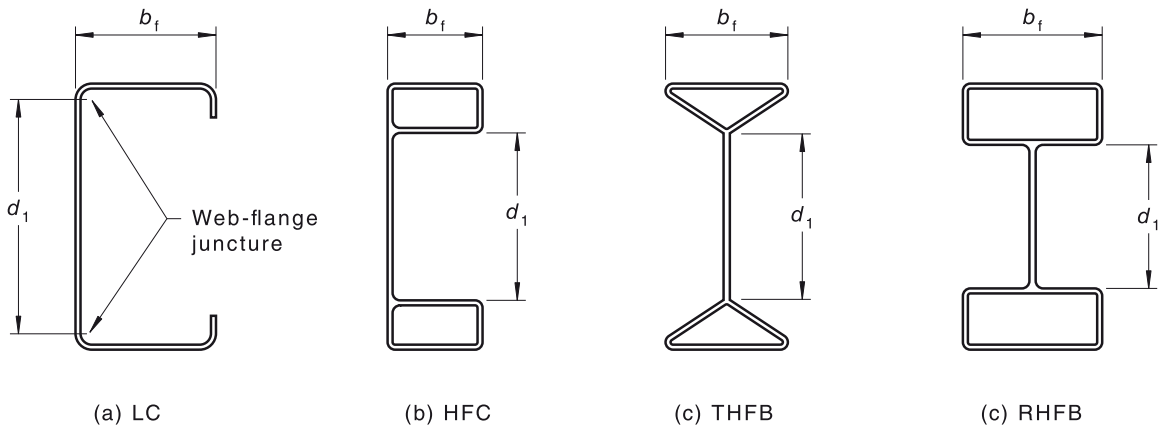

FIGURE D3 HOLLOW FLANGE AND OPEN COLD-FORMED STEEL BEAMS

Accessed by UNIVERSITY OF SOUTH AUSTRALIA on 03 May 2019 (Document currency not guaranteed when printed)

COPYRIGHT

APPENDIX E

SECTION PROPERTIES

(Normative)

E1 SHEAR CENTRE DISTANCE (*m*), TORSION CONSTANT (*J*) AND WARPING CONSTANT (I_w)

Values of m, J and I_w for certain sections are shown in Figure E1.

For I_w of sections other than those given in Figure E1, I_w shall be taken as zero for box sections.

E2 MONOSYMMETRY SECTION CONSTANTS

Monosymmetry section constants shall be calculated as follows:

$$\beta_x = \frac{1}{I_x}\left(\int_A x^2 y \, dA + \int_A y^3 \, dA\right) - 2y_o \qquad \text{. . . E2(1)}$$

$$\beta_y = \frac{1}{I_y}\left(\int_A xy^2 \, dA + \int_A x^3 \, dA\right) - 2x_o \qquad \text{. . . E2(2)}$$

where the x-axis is the axis of symmetry (see Table E1)—

$$\beta_x = 0 \qquad \text{. . . E2(3)}$$

$$\beta_y = \frac{\beta_w + \beta_f + \beta_L}{I_y} - 2x_o \qquad \text{. . . E2(4)}$$

NOTES:

1 For doubly-symmetric sections, $\beta_x = 0$ and $\beta_y = 0$.

2 In the calculation of β_y using the value of x_o, determined from Table E1, x_o and $\bar{x}$ shall be taken as negative.

Where the y-axis is the axis of symmetry, x and y shall be interchanged in the equations for the x-axis of symmetry and Table E1.

Accessed by UNIVERSITY OF SOUTH AUSTRALIA on 03 May 2019 (Document currency not guaranteed when printed)

COPYRIGHT

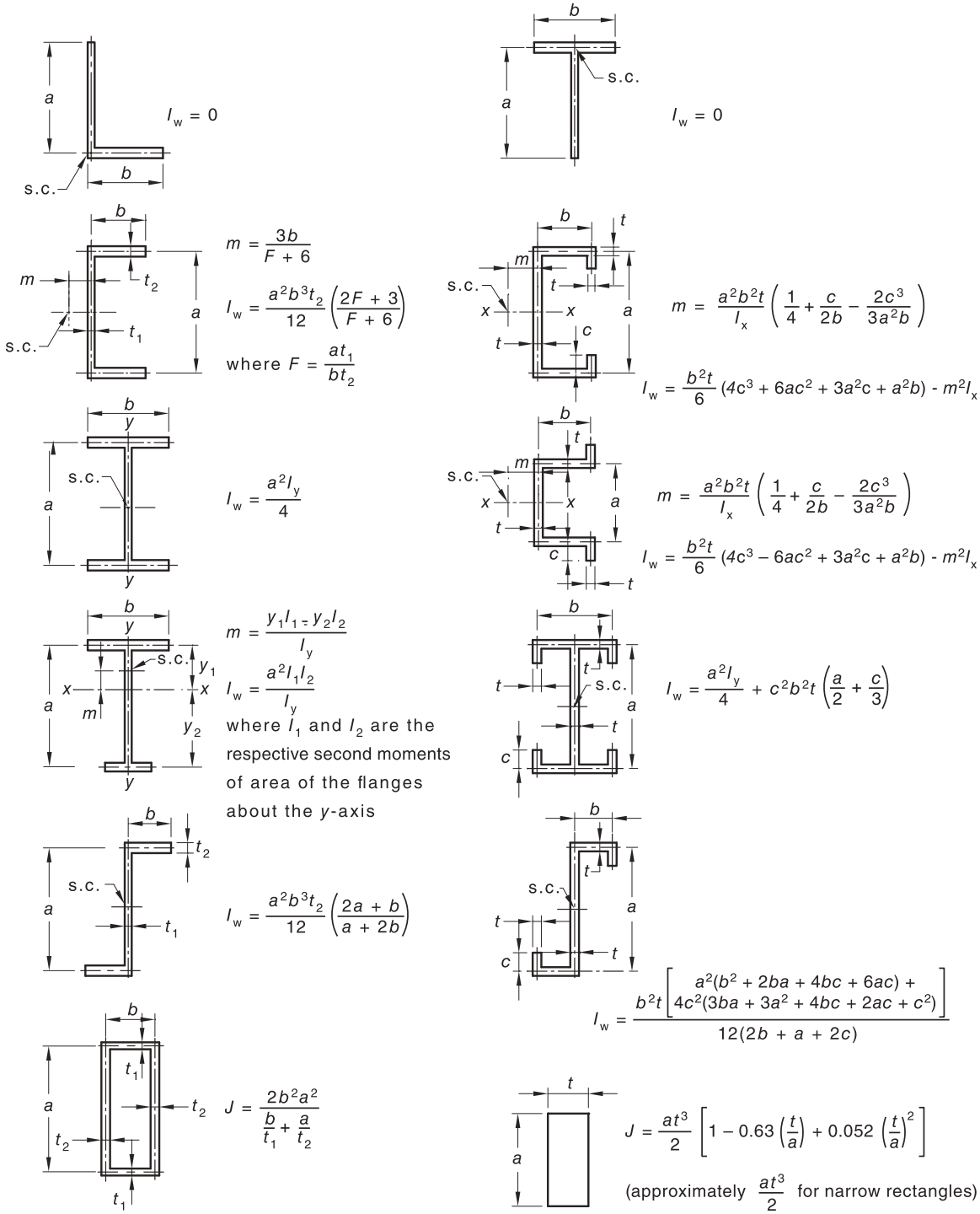

LEGEND: s.c. = shear centre

NOTES:

1 For all open section: $J = \Sigma\frac{bt^3}{3}$.

2 For members cold-formed from a single steel sheet of uniform thickness: $J = \frac{w_f t^3}{3}$, where w_f is the feed width of the flat sheet.

3 For the box and rectangle sections, I_w is negligibly small in comparison to J.

FIGURE E1 SHEAR CENTRE DISTANCE, TORSION CONSTANT AND WARPING CONSTANT FOR CERTAIN SECTIONS

Accessed by UNIVERSITY OF SOUTH AUSTRALIA on 03 May 2019 (Document currency not guaranteed when printed)

Accessed by UNIVERSITY OF SOUTH AUSTRALIA on 03 May 2019 (Document currency not guaranteed when printed)

TABLE E1

CERTAIN MONOSYMMETRIC SECTIONS—CENTROID AND SHEAR-CENTRE DISTANCES AND MONOSYMMETRY SECTION CONSTANTS

Section	$\bar{x}$	x_o	β_w	β_f	β_L
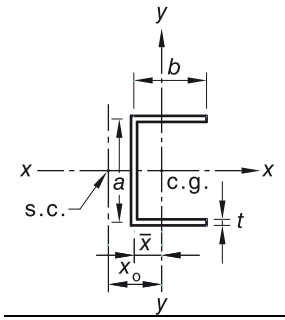	$\dfrac{b^2}{a+2b}$	$\dfrac{b^2}{a+2b}+\dfrac{3b^2}{6b+a}$	$\dfrac{1}{12}t\bar{x}a^3+t(\bar{x})^3a$	$\dfrac{1}{2}t\left[(b+\bar{x})^4-(\bar{x})^4\right]+\dfrac{1}{4}a^2t\left[(b+\bar{x})^2-(\bar{x})^2\right]$	0
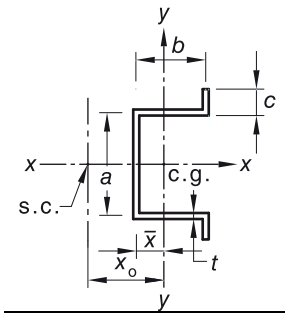	$\dfrac{b(b+2c)}{a+2b+2c}$	$\dfrac{bt(b+2c)}{A}+\dfrac{bt}{12I_x}\left(6ca^2+3ba^2-8c^3\right)$	$\dfrac{1}{12}t\bar{x}a^3+t(\bar{x})^3a$	$\dfrac{1}{2}t\left[(b+x)^4-(\bar{x})^4\right]+\dfrac{1}{4}a^2t\left[(b+\bar{x})^2-(\bar{x})^2\right]$	$2ct(\bar{x}+b)^3+\dfrac{2}{3}t(\bar{x}+b)\left[\left(\dfrac{a}{2}+c\right)^3-\left(\dfrac{a}{2}\right)^3\right]$
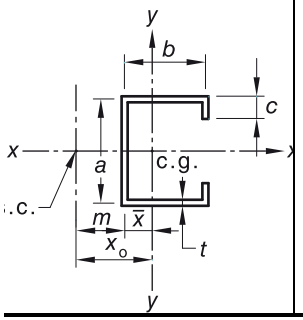	$\dfrac{b(b+2c)}{a+2b+2c}$	$\dfrac{bt(b+2c)}{A}+\dfrac{bt}{12I_x}\left(6ca^2+3ba^2-8c^3\right)$	$\dfrac{1}{12}t\bar{x}a^3+t(\bar{x})^3a$	$\dfrac{1}{2}t\left[(b+\bar{x})^4-(\bar{x})^4\right]+\dfrac{1}{4}a^2t\left[(b+\bar{x})^2-(\bar{x})^2\right]$	$2ct(\bar{x}+b)^3+\dfrac{2}{3}t(\bar{x}+b)\left[\left(\dfrac{a}{2}\right)^3-\left(\dfrac{a}{2}-c\right)^3\right]$

LEGEND:
s.c = shear entre
c.g. = centre of gravity

COPYRIGHT

APPENDIX F

STANDARD TESTS FOR SINGLE-POINT FASTENER CONNECTIONS

(Normative)

F1 SCOPE

This Appendix sets out test methods to evaluate the structural performance of single-point fastener connections and clinching. The following tests shall be made for single-point fastener connections:

(a) Shear test (see Paragraph F3).

(b) Cross-tension tests (see Paragraph F4).

F2 MATERIAL

A specimen of the steel sheet shall be tested in accordance with AS 1391 to determine its physical properties.

F3 SHEAR TEST

F3.1 General

A specimen consisting of two strips of steel sheet, connected by a single fastener through overlapped ends, shall be evaluated for its capacity to resist a tensile force.

F3.2 Apparatus

The following apparatus shall be used:

(a) *Grips* Any device that is capable of holding the ends of the test specimen in such a way as to ensure uniform loading. In addition, for test specimens where the thickness at each end exceeds 2.0 mm, packing shims or adjustable grips shall be used to ensure central loading across the lap joint.

(b) *Loading device* Any suitable device that is capable of loading the grips uniaxially at a controlled rate.

(c) *Instrumentation* Capable of measuring a force applied to the test specimen to a minimum accuracy of ±1%, and displacement across the joint to a minimum accuracy of 0.02 mm.

F3.3 Test specimen

The test specimen shall consist of two strips of flat steel joined by lapping the ends and fastening through the centre of the lapped area (see Figure F1). The strips shall be joined together flat and shall be free of any residue. The fastener shall be installed within 3.0 mm of its specified location and in accordance with the manufacturer's recommendations or the actual site practice, as applicable.

F3.4 Procedure

The procedure for the shear test shall be as follows:

(a) Align the test specimen in the grips and clamp.

(b) Monitor load and displacement.

(c) Load the specimen at a controlled rate to ensure the test is completed within a 30 s to 240 s time frame.

Accessed by UNIVERSITY OF SOUTH AUSTRALIA on 03 May 2019 (Document currency not guaranteed when printed)

COPYRIGHT

(d) Stop the test once the maximum load has been reached and the load has either dropped off, or the joint has undergone a displacement of 6.0 mm or the fastener diameter, whichever is greater.

(e) Record the maximum load and mode of failure.

F4 CROSS-TENSION TEST

F4.1 General

Specimens consisting of two strips of steel sheet, connected by a single fastener to form a cross, shall be evaluated for their capacity to resist a tensile force applied perpendicular to the plane of the specimen.

F4.2 Apparatus

The following apparatus shall be used:

(a) *Holding jig* The jig for holding the cross-tension specimen is shown in Figure F2. The attachment of the jig to the loading device shall allow for self-alignment.

(b) *Loading device* Any suitable device that is capable of loading the halves of the holding jig uniaxially at a controlled rate.

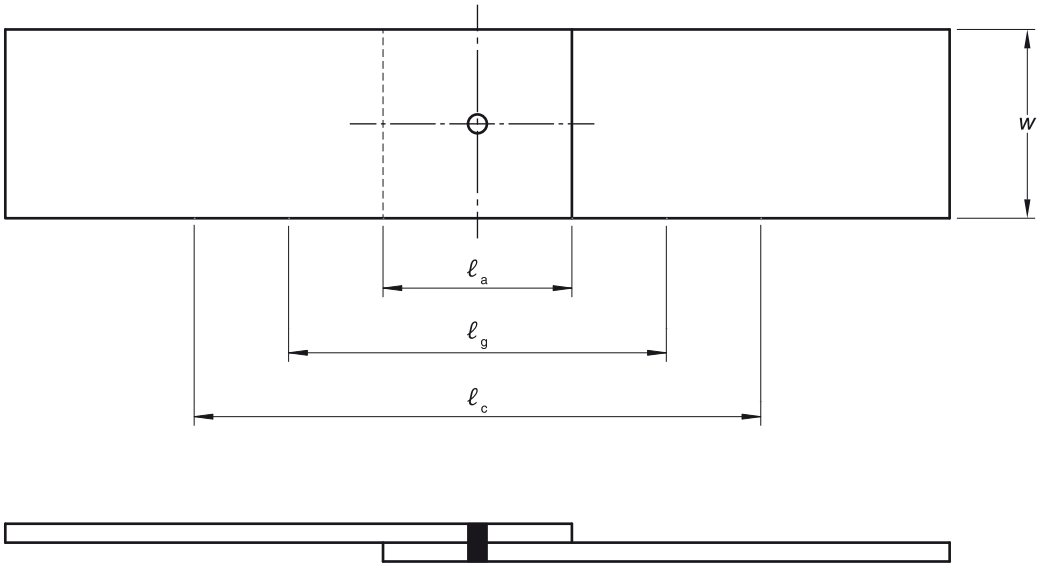

millimetres

Fastener	Width of the specimen (w)	Lap length (l_a)	Gauge length for measuring the joint displacement (l_g)		Unclamped length of the specimen (l_c)
			Min.	Max.	Min.
Clinches and all other fasteners with shank diameters ≤7.0 mm	50	50	100	150	150
All fasteners with shank diameters >7.0 mm	$8d_{sh}$	$8d_{sh}$	$16d_{sh}$	$24d_{sh}$	$24d_{sh}$

NOTE: d_{sh} is the nominal shank diameter.

FIGURE F1 SPECIMEN FOR SHEAR TEST

Accessed by UNIVERSITY OF SOUTH AUSTRALIA on 03 May 2019 (Document currency not guaranteed when printed)

F4.3 Test specimen

The test specimen consists of two strips of flat steel crossed and joined through the centre with a fastener (see Figure F3). The strips shall be joined together flat and shall be free of any residue. The fastener shall be installed within 3 mm of its specified location and in accordance with the manufacturer's specifications or the actual site practice, as applicable.

F4.4 Procedure

The procedure for the cross-tension test shall be as follows:

(a) Align the test specimen in the holding jig and clamp.

(b) Load the specimen at a controlled rate to ensure the test is completed within a 30 s to 240 s time frame.

(c) Stop the test once the maximum load has been reached and the load has dropped off.

(d) Record the maximum load and mode of failure.

F5 REPORT

The following shall be reported:

(a) Number of this Australian/New Zealand Standard, i.e. AS/NZS 4600.

(b) Testing laboratory.

(c) Type of test, i.e. shear or cross-tension test.

(d) Type and properties of the fastener and method of installation.

(e) Type and properties of the sheet material.

(f) Duration of test.

(g) Maximum load.

(h) Load-displacement curve.

(i) Mode of failure.

Accessed by UNIVERSITY OF SOUTH AUSTRALIA on 03 May 2019 (Document currency not guaranteed when printed)

COPYRIGHT

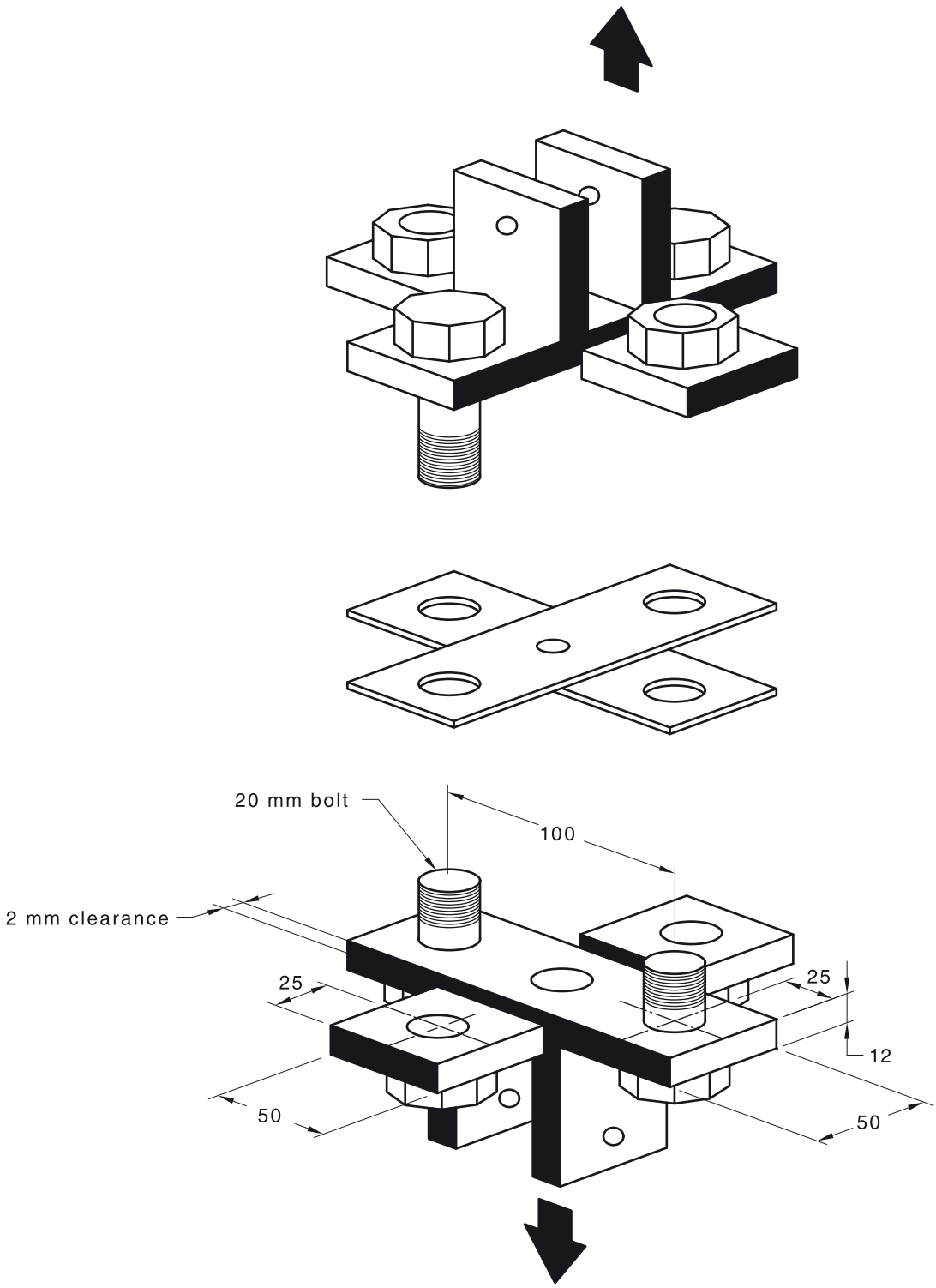

DIMENSIONS IN MILLIMETRES

FIGURE F2 HOLDING JIG FOR CROSS-TENSION TEST SPECIMEN

Accessed by UNIVERSITY OF SOUTH AUSTRALIA on 03 May 2019 (Document currency not guaranteed when printed)

COPYRIGHT

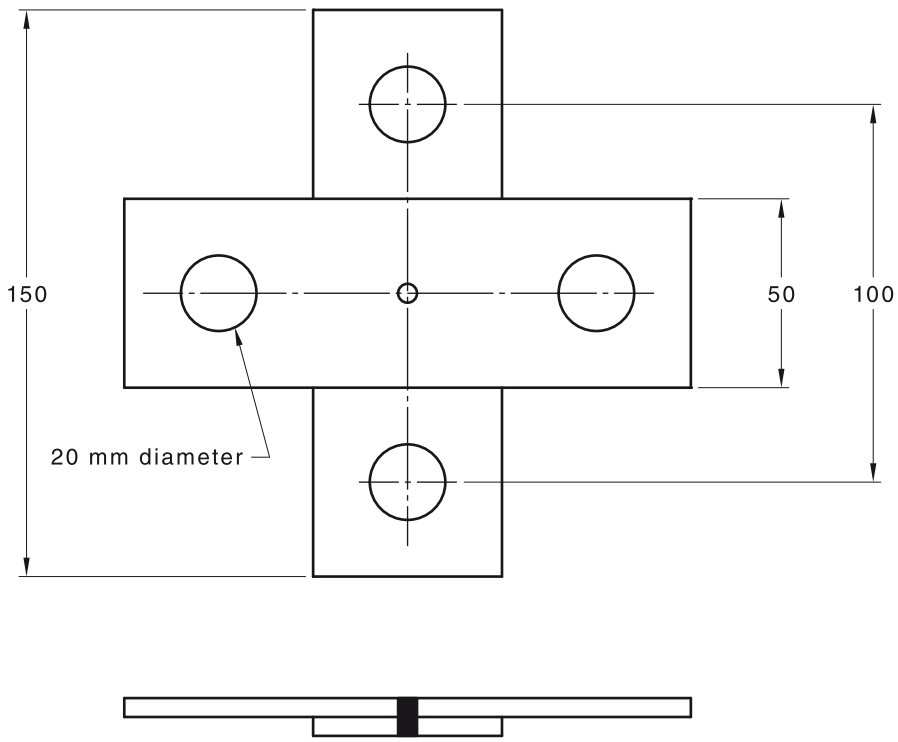

DIMENSIONS IN MILLIMETRES

FIGURE F3 SPECIMEN FOR CROSS-TENSION TEST

Accessed by UNIVERSITY OF SOUTH AUSTRALIA on 03 May 2019 (Document currency not guaranteed when printed)

COPYRIGHT

APPENDIX G

MEMBERS SUBJECT TO NON-UNIFORM TEMPERATURE DISTRIBUTIONS

(Informative)

G1 COLD-FORMED STEEL STRUCTURAL MEMBERS IN LOADBEARING WALLS

G1.1 General

Cold-formed steel structural members (studs) in loadbearing walls are subjected to combined axial compression and bending actions due to non-uniform temperature distributions across their cross-section. The moment action is due to thermal bowing, neutral axis shift and their magnifications as shown in Figure G1. Their load-carrying capacity (N^*) after being exposed for a certain period during a fire event shall be determined using an idealized non-uniform temperature distribution [Figure G1(a)] at the defined period using the following equations and steps. Any variation of temperature along the member length may be included in the calculations through the use of an average temperature.

G1.2 Member compression capacity

The member compression capacity $N_{c,T}$ allowing for the non-uniform variation of strength and stiffness of steel across the cross-section is calculated as follows.

$$N_{c,T} = A_{eff,T} f_{n,T} \qquad \text{. . . G1(1)}$$

where

$f_{n,T}$ = critical stress at elevated temperature calculated using the weighted average modulus of elasticity and yield stress at elevated temperature based on gross area in accordance with Clause 3.4 (flexural torsional buckling and flexural buckling about the minor axis are considered to be eliminated by lateral restraints provided by fire protective boards)

$A_{eff,T}$ = sum of the effective area of each element in compression at elevated temperature, calculated using the critical stress ($f_{n,T}$) and effective widths of uniformly compressed stiffened (Clause 2.2.1), unstiffened (Clause 2.3.1) and with an edge stiffener (Clause 2.4) elements at elevated temperature

Elevated temperature mechanical properties $f_{y,T}$ and E_T and are calculated in accordance with Clause 9.4.

G1.3 Section moment capacity

The section moment capacity ($M_{x,eff,T}$) about the major axis is calculated as follows (lateral torsional buckling is considered to be eliminated by lateral restraints provided by fire protective boards). Minor axis bending effects are considered negligible.

At mid-height $$M_{x,eff,T,mid} = Z_{eff,T} f_{y,T,mid\text{-}web} \qquad \text{. . . G1(2)}$$

At support $$M_{x,eff,T,sup} = Z_{eff,T} f_{y,T,HF} \qquad \text{. . . G1(3)}$$

$$Z_{eff,T} = \frac{I_{eff,T}}{y_{max.}} \qquad \text{. . . G1(4)}$$

Accessed by UNIVERSITY OF SOUTH AUSTRALIA on 03 May 2019 (Document currency not guaranteed when printed)

COPYRIGHT

$I_{\text{eff,T}}$ = effective second moment of area calculated based on the effective element widths at a uniform temperature based on the mid-web temperature (*represents the average temperature across the cross-section*)

$y_{\text{max.}}$ = maximum distance from the neutral axis of the effective cross-section to the extreme fibre

$f_{\text{y,T,mid-web}}$ = yield stress at the mid-web temperature

$f_{\text{y,T,HF}}$ = yield stress at the hot flange temperature [T_{HF} in Figure G1(a)]

G1.4 Moment

Moment M^* due to thermal bowing, neutral axis shift and their magnification effects is given by the following equation:

At mid-height

$$M^*_{\text{mid}} = \frac{N^* e_{\Delta\text{T}}}{1-\dfrac{N^*}{N_{\text{cr,T}}}} - \frac{N^* e_{\Delta\text{e}}}{1-\dfrac{N^*}{N_{\text{cr,T}}}} \qquad \text{. . . G1(5)}$$

At support

$$M^*_{\text{sup}} = N^* e_{\Delta\text{E}} \qquad \text{. . . G1(6)}$$

where

Thermal bowing deflection

$$e_{\Delta\text{T}} = \frac{\alpha\left(T_{\text{HF}} - T_{\text{CF}}\right)L^2}{8d} \qquad \text{. . . G1(7)}$$

α = average thermal expansion coefficient of steel to be obtained based on the derivatives of relative thermal elongation equations given in Clause 9.4.7 with respect to temperature

T_{HF}, T_{CF} = hot flange and cold flange temperatures [Figure G1(a)]

L = member length

d = section depth

Neutral axis shift about the major axis

$$e_{\Delta\text{E}} = \overline{Y_{\text{eff}}} - \frac{d}{2} \qquad \text{. . . G1(8)}$$

$\overline{Y_{\text{eff}}}$ = distance of centroid from cold flange based on effective cross-section

$N_{\text{cr,T}}$ = flexural buckling capacity

$$N_{cr,T} = \frac{\pi^2 \sum E_{\text{T,i}} I_{\text{T,gr,i}}}{L^2} \qquad \text{. . . G1(9)}$$

$E_{\text{T,i}}$ = elastic modulus of element (i) at elevated temperature

$I_{\text{T,gr,i}}$ = second moment of area of element (i) at elevated temperature (four web elements)

G1.5 Interaction of compression and bending

N^* is determined from Equation G1(10) using iterations, commencing by ignoring any magnification effects from Equation G1(5) and G1(6).

$$\frac{N^*}{N_{\text{c,T}}} + \frac{M^*}{M_{\text{x,eff,T}}} = 1 \qquad \text{. . . G1(10)}$$

As an alternative to the above procedure, the direct strength method in Paragraph G1.6 may also be used.

Accessed by UNIVERSITY OF SOUTH AUSTRALIA on 03 May 2019 (Document currency not guaranteed when printed)

COPYRIGHT

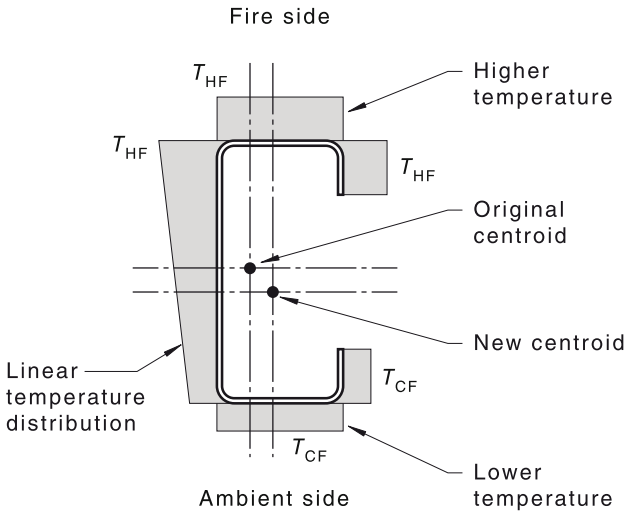

(a) Neutral axis shift ($e_{\Delta E}$)

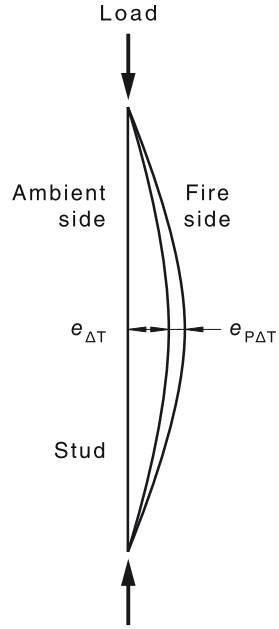

(b) Thermal bowing ($e_{\Delta T}$) and magnification effects ($e_{P\Delta T}$)

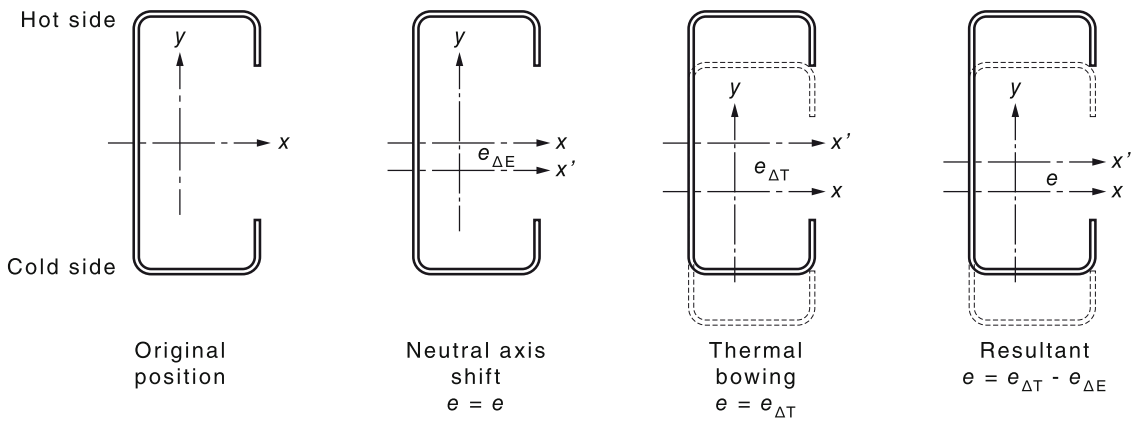

(c) Lateral deflection of wall stud

FIGURE G1 WALL STUD UNDER NON-UNIFORM TEMPERATURE DISTRIBUTION

G1.6 Direct strength method

Flexural buckling capacity ($N_{ce,T}$) is determined as follows:

For $\lambda_c \leq 1.5$ $N_{ce,T} = 0.658^{\lambda c^2} N_{se,T}$ . . . G1[11(A)]

For $\lambda_c > 1.5$ $N_{ce,T} = \dfrac{0.877}{\lambda_c^{\,2}} N_{se,T}$ . . . G1[11(B)]

where

$$\lambda_c = \sqrt{\frac{N_{se,T}}{N_{cr,T}}} \qquad \text{. . . G1[11(C)]}$$

Accessed by UNIVERSITY OF SOUTH AUSTRALIA on 03 May 2019 (Document currency not guaranteed when printed)

COPYRIGHT

$N_{se,T}$ = squash load (sum of the product of the area of element (i) by its elevated temperature yield stress)

$N_{cr,T}$ = flexural buckling capacity from Equation G1(9) (flexural torsional buckling and flexural buckling about the minor axis are considered to be eliminated by lateral restraints provided by fire protective boards)

G1.7 Local buckling capacity

For $\lambda_l \le 0.776$ $N_{cl,T} = N_{ce,T}$ . . . G1[12(A)]

For $\lambda_l > 0.776$ $N_{cl,T} = \left[1 - 0.15\left(\frac{N_{ol,T}}{N_{ce,T}}\right)^{0.4}\right]\left(\frac{N_{ol,T}}{N_{ce,T}}\right)^{0.4} N_{ce,T}$ . . . G1[12(B)]

$$\lambda_l = \sqrt{\frac{N_{ce,T}}{N_{ol,T}}} \quad \text{. . . G1[12(C)]}$$

$N_{ol,T}$ = elastic local buckling load at elevated temperature, $N_{ol,T} = N_{ol,20}\frac{E_{T,mid\text{-}web}}{E_{20}}$

$N_{ol,20}$ = elastic local buckling load at ambient temperature obtained from buckling analysis

$E_{T,mid\text{-}web}$ = modulus of elasticity at mid-web temperature

E_{20} = modulus of elasticity at ambient temperature

Section moment capacity (lateral torsional buckling is considered to be eliminated by lateral restraints provided by fire protective boards).

G1.8 At mid-height

For $\lambda_l \le 0.776$ $M_{x,mid,T} = M_{ce,mid,T} = Z_T f_{y,mid\text{-}web}$ . . . G1[13(A)]

For $\lambda_l > 0.776$ $M_{x,mid,T} = \left[1 - 0.15\left(\frac{M_{ol,T}}{M_{ce,mid,T}}\right)^{0.4}\right]\left(\frac{M_{ol,T}}{M_{ce,mid,T}}\right)^{0.4} M_{ce,mid,T}$ . . . G1[13(B)]

where

$$\lambda_l = \sqrt{\frac{M_{ce,mid,T}}{M_{ol,T}}} \quad \text{. . . G1[13(C)]}$$

$M_{x,mid,T}$ = section moment capacity at mid-height

Z_T = section modulus at a uniform temperature based on the mid-web temperature (*represents the average temperature across the cross-section*)

$f_{y,mid\text{-}web}$ = yield stress at mid-web temperature

$M_{ol,T}$ = elastic local buckling moment at mid-web temperature,

$$M_{ol,T} = M_{ol,20}\frac{E_{T,mid\text{-}web}}{E_{20}}$$

$M_{ol,20}$ = elastic local buckling moment at ambient temperature obtained from buckling analysis

Accessed by UNIVERSITY OF SOUTH AUSTRALIA on 03 May 2019 (Document currency not guaranteed when printed)

COPYRIGHT

G1.9 At support

For $\lambda_l \leq 0.776$ $M_{\text{x,sup,T}} = M_{\text{ce,sup,T}} = Z_{\text{T}} f_{\text{y,HF}}$ . . . G1[14(A)]

For $\lambda_l > 0.776$ $M_{\text{x,sup,T}} = \left[1 - 0.15\left(\frac{M_{\text{o}l,T}}{M_{\text{ce,sup,T}}}\right)^{0.4}\right]\left(\frac{M_{\text{o}l,\text{T}}}{M_{\text{ce,sup,T}}}\right)^{0.4} M_{\text{ce,sup,T}}$ . . . G1[14(B)]

where

$\lambda_l = \sqrt{\frac{M_{\text{ce,sup,T}}}{M_{\text{o}l,\text{T}}}}$ . . . G1[14(C)]

$M_{\text{x,sup,T}}$ = section moment capacity at support

$f_{\text{y,HF}}$ = yield stress at hot flange temperature

Using the compression and bending capacities ($N_{\text{c}l,\text{T}}$ and $M_{\text{x,mid,T}}$ or $M_{\text{x,sup,T}}$), the ultimate capacity of the wall stud (N^*) at elevated temperature shall be determined from the bending and compression interaction formula.

G1.10 At mid-height

$$\frac{N^*}{N_{\text{c}l,\text{T}}} + \frac{M^*_{\text{mid}}}{M_{\text{x,mid,T}}} = 1 \quad \text{. . . G1[15(A)]}$$

G1.11 At support

$$\frac{N^*}{N_{\text{c}l,\text{T}}} + \frac{M^*_{\text{sup}}}{M_{\text{x,sup,T}}} = 1 \quad \text{. . . G1[15(B)]}$$

$\text{N}_{\text{c}l,\text{T}}$ = compression capacity

$M_{\text{x,mid,T}}$ and $M_{\text{x,sup,T}}$ = section moment capacities at mid-height and support, respectively

M^*_{mid} and M^*_{sup} = total bending moment induced in the wall stud at mid-height and support due to thermal bowing, neutral axis shift and their magnifications using Equations G1(5) and G1(6)

Thermal bowing deflection ($e_{\Delta T}$) and neutral axis shift about the major axis ($e_{\Delta E}$) are calculated using Equations G1(7) and G1(8) while $N_{\text{cr,T}}$ is calculated using Equation G1(9).

NOTE: The design method given in this Paragraph is applicable to cold-formed steel sections used as wall studs. It does not include distortional buckling that may occur for some sections used as wall studs.

G2 COLD-FORMED STEEL STRUCTURAL MEMBERS IN FLOORS

G2.1 General

Cold-formed steel structural members (joists) in floors are subjected to non-uniform temperature distributions across their cross-section with fire on one side. There is a neutral axis shift as for wall studs due to varying modulus of elasticity and local buckling. Their load-carrying capacity (M^*) after being exposed for a certain period during a fire event is determined using an idealized non-uniform temperature distribution (Figure G1) at the defined period using the following equations and steps.

Since the compression flange (cold) of the joist is laterally restrained by fire protective boards, the moment capacity is calculated as follows:

Accessed by UNIVERSITY OF SOUTH AUSTRALIA on 03 May 2019 (Document currency not guaranteed when printed)

COPYRIGHT

$$M_{x,eff,T} = Z_{eff,T} f_{y,T} \quad \text{. . . G2(1)}$$

where

$Z_{eff,T}$ = effective section modulus of joist calculated based on the effective element widths at a uniform temperature based on the mid-web temperature (represents the average temperature across the cross-section). This ignores neutral axis shift due to modulus of elasticity variation

$f_{y,T}$ = yield stress at mid-web temperature

As an alternative to the direct strength method (see Paragraphs G1.6 and G2.2) may also be used.

G2.2 Direct Strength Method

The section moment capacity ($M_{bl,T}$) is determined based on a uniform temperature based on the mid-web temperature (i.e. represents the average temperature across the cross-section).

The nominal moment capacity for local buckling is calculated as follows:

$$\text{For } \lambda_l \le 0.776 \quad M_{bl,T} = M_{be,T} \quad \text{. . . G2(2)}$$

$$\text{For } \lambda_l > 0.776 \quad M_{bl,T} = \left[1 - 0.15\left(\frac{M_{ol,T}}{M_{be,T}}\right)^{0.4}\right]\left(\frac{M_{ol,T}}{M_{be,T}}\right)^{0.4} M_{be,T} \quad \text{. . . G2(3)}$$

where

$$\lambda_l = \sqrt{\frac{M_{be,T}}{M_{ol,T}}} \quad \text{. . . G2(4)}$$

$M_{ol,T}$ = elastic local buckling moment at mid-web temperature, . . . G2(5)

$$= M_{ol,20} \frac{E_{T,mid\text{-}web}}{E_{20}}$$

$M_{ol,20}$ = elastic local buckling moment at ambient temperature obtained from buckling analysis

$$M_{be,T} = M_{y,T} = Z_{f,T} f_{y,T} \quad \text{. . . G2(6)}$$

where

$M_{be,T}$ = nominal member moment capacity for lateral-torsional buckling

= first yield moment $M_{y,T}$ at the uniform mid-web temperature since no lateral-torsional buckling occurs in floor systems

$Z_{f,T}$ = full section modulus at first yield at the uniform mid-web temperature and,

$f_{y,T}$ = yield stress at mid-web temperature

Accessed by UNIVERSITY OF SOUTH AUSTRALIA on 03 May 2019 (Document currency not guaranteed when printed)

COPYRIGHT

BIBLIOGRAPHY

The following non-mandatory documents are referred to in this Standard:

AS/NZS

2311 Guide to the painting of buildings

2312 Guide to the protection of iron and steel against exterior atmospheric corrosion (Series)

ASTM

E9 Standard Test Methods of Compression Testing of Metallic Materials at Room Temperature

New Zealand Building Code
Verification Method (B2/VM1) and Acceptable Solutions (B2/AS1)

New Zealand Building Code Handbook

Accessed by UNIVERSITY OF SOUTH AUSTRALIA on 03 May 2019 (Document currency not guaranteed when printed)

COPYRIGHT

NOTES

Accessed by UNIVERSITY OF SOUTH AUSTRALIA on 03 May 2019 (Document currency not guaranteed when printed)

Standards Australia

Standards Australia is an independent company, limited by guarantee, which prepares and publishes most of the voluntary technical and commercial standards used in Australia. These standards are developed through an open process of consultation and consensus, in which all interested parties are invited to participate. Through a Memorandum of Understanding with the Commonwealth government, Standards Australia is recognized as Australia's peak national standards body.

Standards New Zealand

The first national Standards organization was created in New Zealand in 1932. The New Zealand Standards Executive is established under the Standards and Accreditation Act 2015 and is the national body responsible for the production of Standards.

Australian/New Zealand Standards

Under a Memorandum of Understanding between Standards Australia and Standards New Zealand, Australian/New Zealand Standards are prepared by committees of experts from industry, governments, consumers and other sectors. The requirements or recommendations contained in published Standards are a consensus of the views of representative interests and also take account of comments received from other sources. They reflect the latest scientific and industry experience. Australian/New Zealand Standards are kept under continuous review after publication and are updated regularly to take account of changing technology.

International Involvement

Standards Australia and Standards New Zealand are responsible for ensuring that the Australian and New Zealand viewpoints are considered in the formulation of international Standards and that the latest international experience is incorporated in national and Joint Standards. This role is vital in assisting local industry to compete in international markets. Both organizations are the national members of ISO (the International Organization for Standardization) and IEC (the International Electrotechnical Commission).

Visit our web sites

www.standards.org.au www.standards.govt.nz

Accessed by UNIVERSITY OF SOUTH AUSTRALIA on 03 May 2019 (Document currency not guaranteed when printed)

Accessed by UNIVERSITY OF SOUTH AUSTRALIA on 03 May 2019 (Document currency not guaranteed when printed)

STANDARDS Australia

GPO Box 476 Sydney NSW 2001
Phone (02) 9237 6000
Email mail@standards.org.au
Internet www.standards.org.au
SAI Global Customer Service
Phone 13 12 42
Email sales@saiglobal.com

STANDARDS® NEW ZEALAND
PAEREWA AOTEAROA

PO Box 1473 Wellington 6140
Freephone 0800 782 632
Phone (04) 498 5990
Email enquiries@standards.govt.nz
Website www.standards.govt.nz

ISBN 978 1 76072 061 2

Printed in Australia

This page has been left intentionally blank.

Accessed by UNIVERSITY OF SOUTH AUSTRALIA on 03 May 2019 (Document currency not guaranteed when printed)